Standard Detail Index

SECTION 4 ♦ STREETS AND SIDEWALKS

Detail #	Detail Description
R-4.01	Typical Street Sections (Residential)
R-4.02	Typical Street Sections (Subcollector)
R-4.03	Typical Street Sections (Collector)
R-4.04	Typical Street Section (Minor Thoroughfare)
R-4.05	Typical Street Section (Major Thoroughfare)
R-4.06	Typical Cul-De-Sac Section
R-4.07	Minimum Street Geometric Requirements
R-4.08	Concrete Curb and Gutter
R-4.09	Concrete Sidewalk
R-4.10	Curb Ramp
R-4.11	Typical Driveway Apron (Curb and Gutter)
R-4.12	Method of Removing Existing Curb
R-4.13	Residential Driveway Apron (Non-Curb and Gutter)
S-4.14	Typical Pavement Repair
S-4.15	Typical Curb Drain
S-4.16	Standard Catch Basin Transition for 24" Vertical Curb and Gutter
S-4.17	Suggested Utility Locations
S-4.18	Standard Right of Way Marker

♦ ♦ ♦ ♦ ♦

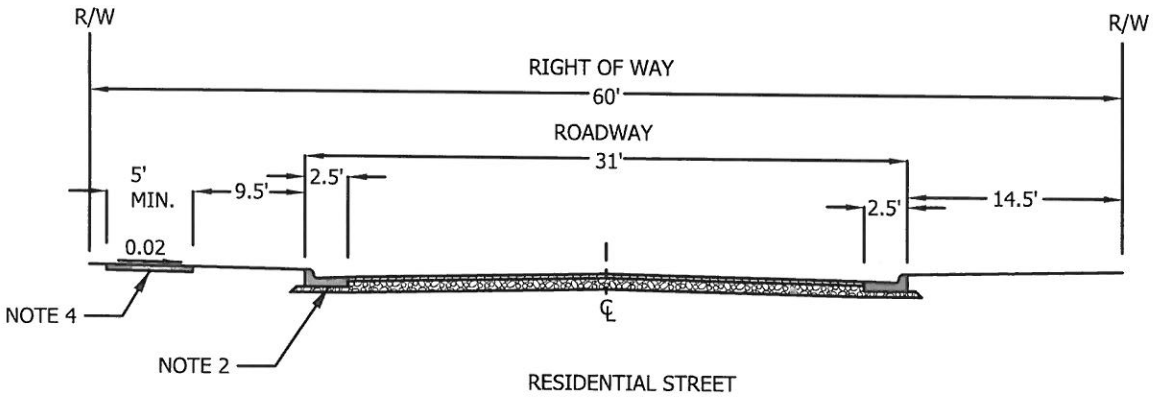

RESIDENTIAL STREET

NOTES:

1) NORMAL CROWN OF ¼" PER FOOT SHALL BE USED UNLESS OTHERWISE DIRECTED BY THE THE CITY.
2) 24" CURB AND GUTTER MAY BE ALLOWED BY THE CITY.
3) NON-CURB AND GUTTER RESIDENTIAL STREETS MAY BE ALLOWED AS PER UDO.
4) SIDEWALK MAY BE REQUIRED AS PER UDO.

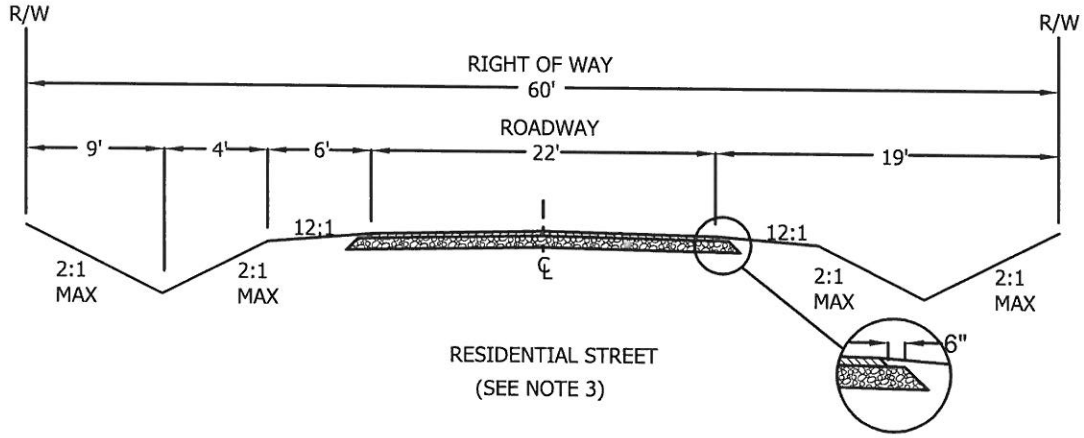

RESIDENTIAL STREET
(SEE NOTE 3)

MINIMUM PAVEMENT DESIGN

2" ASPHALT CONCRETE SURFACE COURSE
8" AGGREGATE BASE COURSE - IN LIEU OF 8" ABC
4" OF ASPHALT CONCRETE BASE COURSE MAY BE USED IF APPROVED BY THE CITY.

TYPICAL STREET SECTIONS (RESIDENTIAL)

DATE:	REVISIONS

STANDARD DETAIL

DATE: 10-03-16
SHEET 1 OF 1
STD. No. R-4.01

CITY OF CLAREMONT, NORTH CAROLINA · 1893 ·

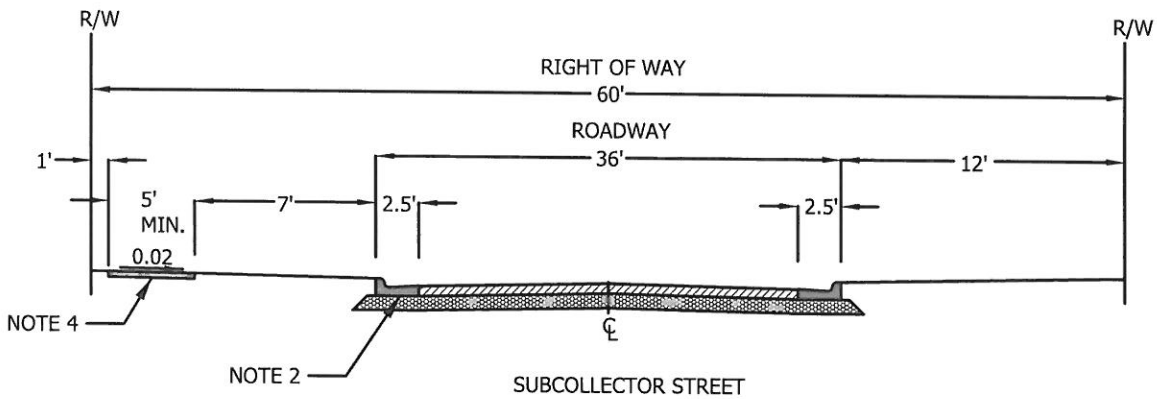

NOTES:

1) NORMAL CROWN OF ¼" PER FOOT SHALL BE USED UNLESS OTHERWISE DIRECTED BY THE CITY.
2) 24" CURB AND GUTTER MAY BE ALLOWED BY THE CITY.
3) NON-CURB AND GUTTER STREETS MAY BE ALLOWED AS PER UDO.
4) SIDEWALK MAY BE REQUIRED AS PER UDO.
5) ADDITIONAL THICKNESS MAY BE REQUIRED BY THE CITY.

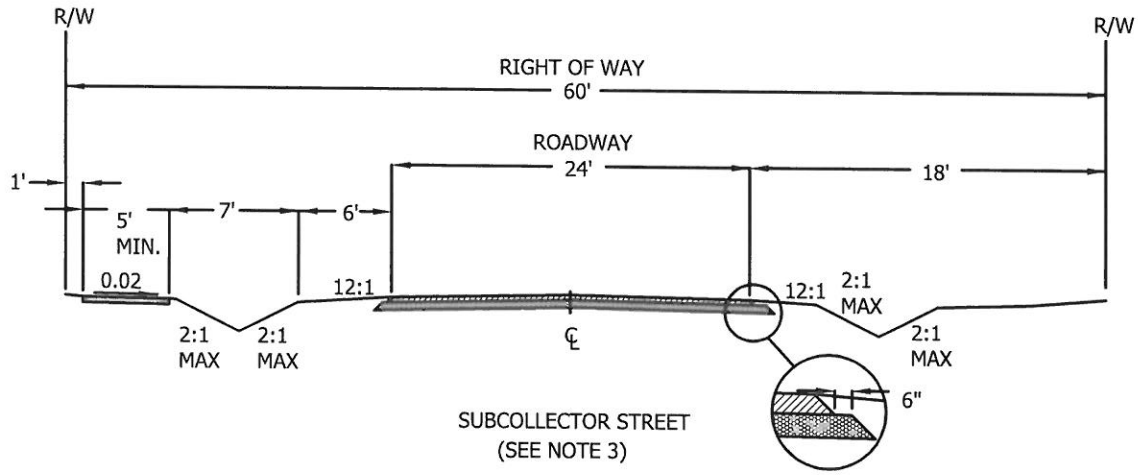

MINIMUM PAVEMENT DESIGN

2" ASPHALT CONCRETE SURFACE COURSE
8" AGGREGATE BASE COURSE - IN LIEU OF 8" ABC
4" OF ASPHALT CONCRETE BASE COURSE MAY BE USED IF APPROVED BY THE CITY.

TYPICAL STREET SECTIONS (SUBCOLLECTOR)

DATE:	REVISIONS

STANDARD DETAIL

DATE: 10-03-16
SHEET 1 OF 1
STD. No. R-4.02

CITY OF CLAREMONT, NORTH CAROLINA · 1893 ·

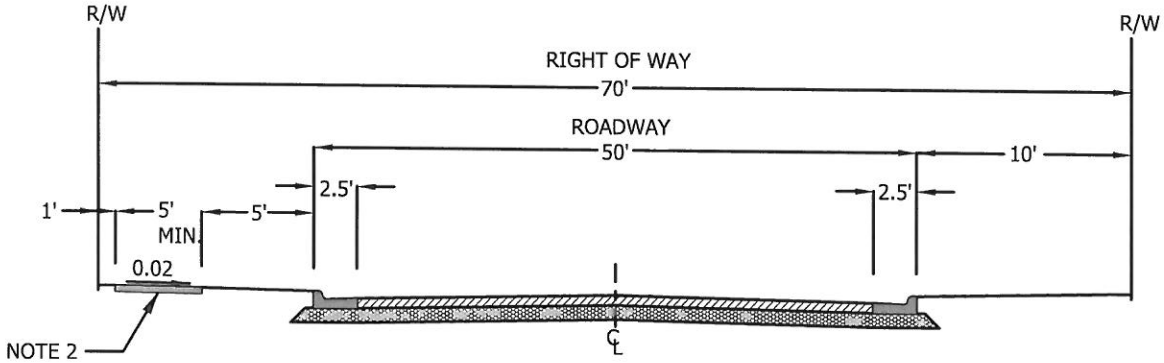

COLLECTOR STREET

NOTES:

1) NORMAL CROWN OF ¼" PER FOOT SHALL BE USED UNLESS OTHERWISE DIRECTED BY THE CITY.
2) SIDEWALK MAY BE REQUIRED AS PER UDO.
3) ADDITIONAL THICKNESS MAY BE REQUIRED BY THE CITY.

MINIMUM PAVEMENT DESIGN

2" ASPHALT CONCRETE SURFACE COURSE
8" AGGREGATE BASE COURSE - IN LIEU OF 8" ABC
4" OF ASPHALT CONCRETE BASE COURSE MAY BE USED IF APPROVED BY THE CITY.

TYPICAL STREET SECTIONS (COLLECTOR)

DATE:	REVISIONS

STANDARD DETAIL

DATE: 10-03-16
SHEET 1 OF 1
STD. No. R-4.03

CITY OF CLAREMONT, NORTH CAROLINA · 1893 ·

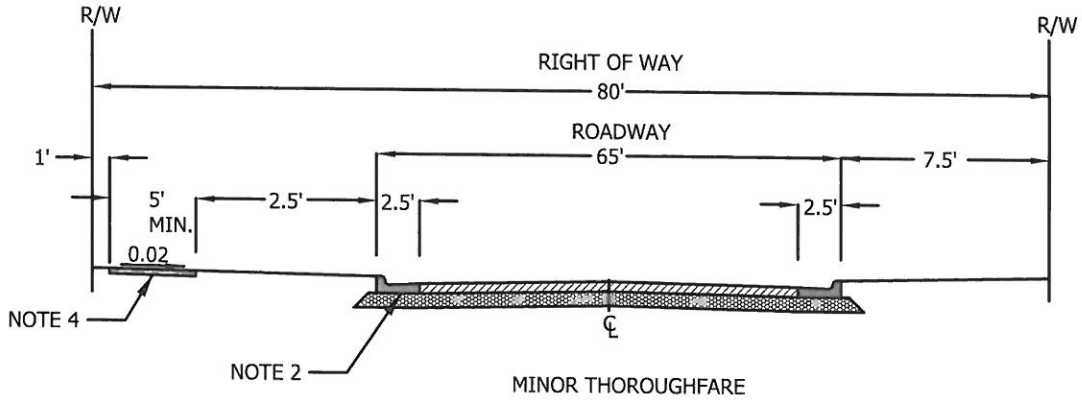

NOTES:

1) NORMAL CROWN OF ¼" PER FOOT SHALL BE USED UNLESS OTHERWISE DIRECTED BY THE CITY.
2) 24" CURB AND GUTTER MAY BE ALLOWED BY THE CITY.
3) NON-CURB AND GUTTER RESIDENTIAL STREETS MAY BE ALLOWED AS PER UDO.
4) SIDEWALK MAY BE REQUIRED AS PER UDO.
5) ADDITIONAL THICKNESS MAY BE REQUIRED BY THE CITY.

MINIMUM PAVEMENT DESIGN

2" ASPHALT CONCRETE SURFACE COURSE
10" AGGREGATE BASE COURSE - IN LIEU OF 10" ABC
5" OF ASPHALT CONCRETE BASE COURSE MAY BE USED IF APPROVED BY THE CITY.

TYPICAL STREET SECTION (MINOR THOROUGHFARE)

DATE:	REVISIONS

STANDARD DETAIL

DATE: 10-03-16
SHEET 1 OF 1
STD. No. R-4.04

CITY OF CLAREMONT, NORTH CAROLINA · 1893 ·

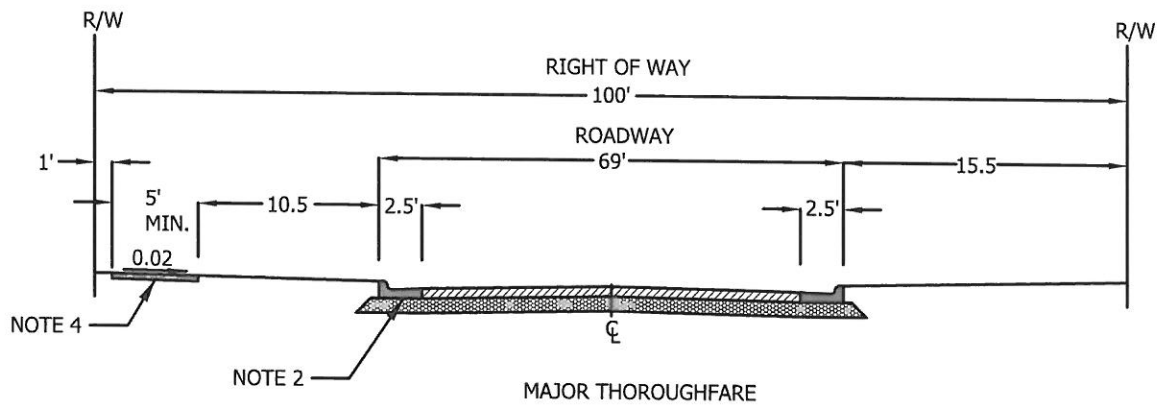

NOTES:

1) NORMAL CROWN OF ¼" PER FOOT SHALL BE USED UNLESS OTHERWISE DIRECTED BY THE CITY.
2) 24" CURB AND GUTTER MAY BE ALLOWED BY THE CITY.
3) NON-CURB AND GUTTER RESIDENTIAL STREETS MAY BE ALLOWED AS PER UDO.
4) SIDEWALK MAY BE REQUIRED AS PER UDO.
5) ADDITIONAL THICKNESS MAY BE REQUIRED BY THE CITY.
6) WIDTH MAY BE ADJUSTED BY THE CITY.

MINIMUM PAVEMENT DESIGN

2" ASPHALT CONCRETE SURFACE COURSE
10" AGGREGATE BASE COURSE - IN LIEU OF 10" ABC
5" OF ASPHALT CONCRETE BASE COURSE MAY BE USED IF APPROVED BY THE CITY.

TYPICAL STREET SECTION (MAJOR THOROUGHFARE)

DATE:	REVISIONS

STANDARD DETAIL

DATE: 10-03-16
SHEET 1 OF 1
STD. No. R-4.05

CITY OF CLAREMONT, NORTH CAROLINA · 1893 ·

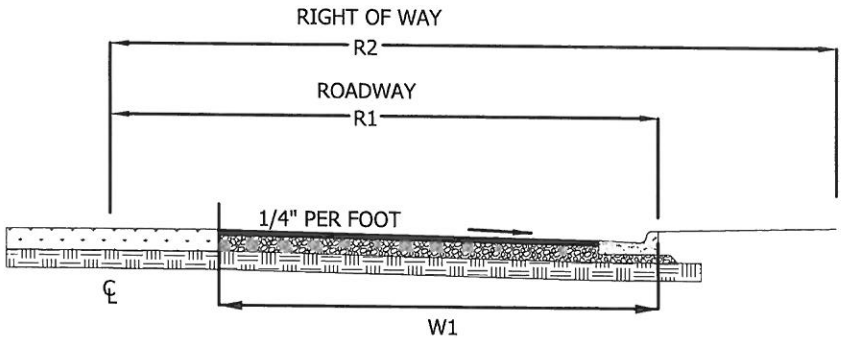

SECTION "A-A"

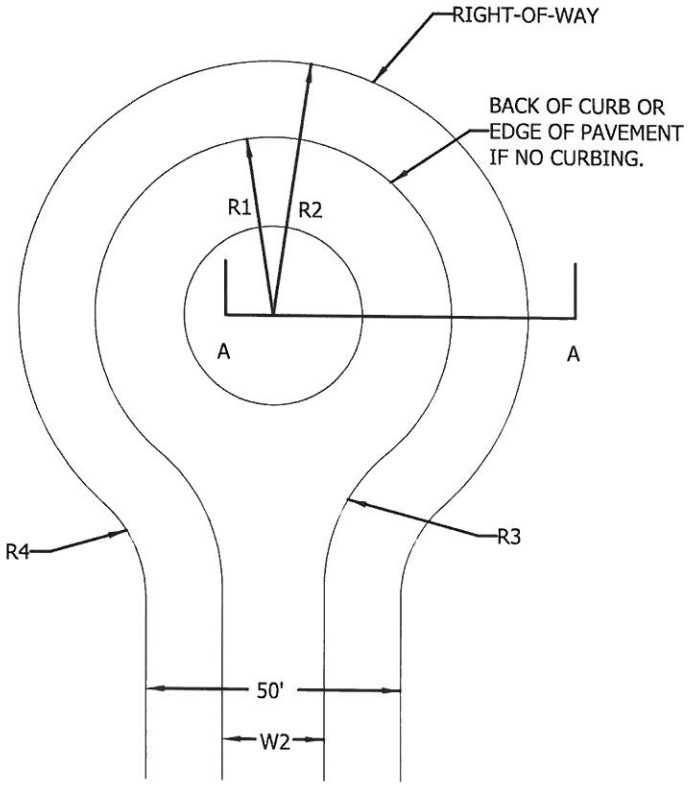

NOTES:

1) NORMAL CROWN OF ¼" PER FOOT SHALL BE USED UNLESS OTHERWISE DIRECTED BY THE CITY.
2) 24" CURB AND GUTTER MAY BE ALLOWED BY THE CITY.
3) NON-CURB AND GUTTER RESIDENTIAL STREETS MAY BE ALLOWED AS PER UDO.
4) SIDEWALK MAY BE REQUIRED AS PER UDO.
5) CENTER OF CUL-DE-SAC MAY BE PAVED. ANY UNPAVED SECTION MUST BE LANDSCAPED.

MINIMUM PAVEMENT DESIGN

2" ASPHALT CONCRETE SURFACE COURSE
8" AGGREGATE BASE COURSE - IN LIEU OF 8" ABC
4" OF ASPHALT CONCRETE BASE COURSE MAY BE USED IF APPROVED BY THE CITY.

	R1	R2	R3	R4	W1	W2
CURB AND GUTTER SECTION	35'	50'	40'	25'	28'	28'
NON-CURB AND GUTTER SECTION	35'	50'	40'	25'	22'	22'

TYPICAL CUL-DE-SAC SECTION

DATE:	REVISIONS

STANDARD DETAIL

DATE: 10-03-16

SHEET 1 OF 1

STD. No. R-4.06

CITY OF CLAREMONT, NORTH CAROLINA · 1893 ·

CLASSIFICATION	MAX. GRADE (%)	HORIZONTAL CURVE CONTROLS		VERTICAL CURVE CONTROLS	
		MAX. SUPER ELEVATION (%)	MIN. CL RADIUS (FT)	MIN. LENGTH CREST (FT)	MIN. LENGTH SAG (FT)
THOROUGHFARE	7	6	850	85A	100A
MAJOR COLLECTOR	7	4	550	30A	50A
MINOR COLLECTOR RESIDENTIAL STREET	10	NC	150	12A	30A

NOTES:

1) A = ALGEBRAIC DIFFERENCE IN GRADES.
2) NC = NORMAL CROWN - A PARABOLIC CROWN WITH AN AVERAGE CROSS SLOPE OF THE 1/4" PER FOOT MEASURED OUTWARD FROM THE CENTERLINE.
3) THIS TABLE OUTLINES MINIMUMS FOR ROADWAY DESIGN. SOUND ENGINEERING JUDGEMENT SHOULD BE EXERCISED WHEN USING MINIMUM DESIGN STANDARDS FOR ROADS.
4) ALTERNATE DESIGNS SHALL BE IN ACCORDANCE WITH THE LATEST EDITION PUBLISHED BY AASHTO: A POLICY ON GEOMETRIC DESIGN OF HIGHWAYS AND STREETS.
5) GRADES SHALL NOT EXCEED 5% WITHIN 100 FEET OF INTERSECTIONS UNLESS APPROCED BY THE CITY.
6) MINIMUM GRADE SHALL BE 0.5% UNLESS APPROVED BY THE CITY.

MINIMUM STREET GEOMETRIC REQUIREMENTS

DATE:	REVISIONS

STANDARD DETAIL

DATE: 10-03-16

SHEET 1 OF 1

STD. No. R-4.07

CITY OF CLAREMONT, NORTH CAROLINA · 1893 ·

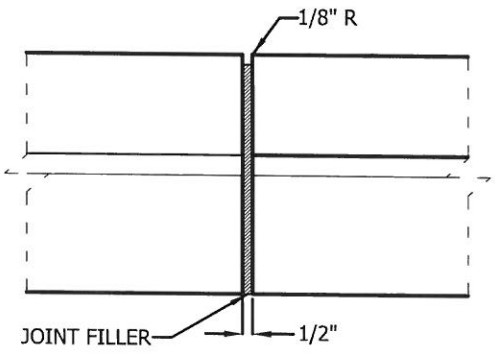

FRONT ELEVATION

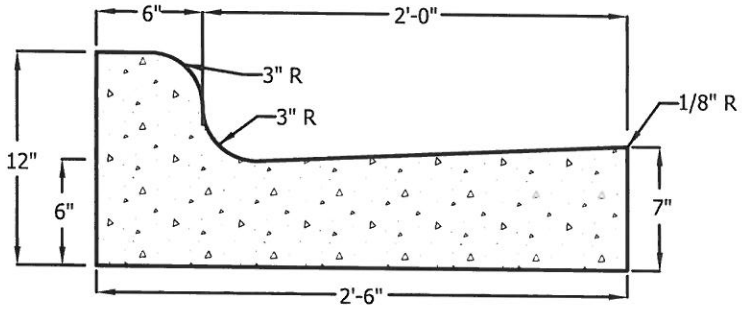

SECTION

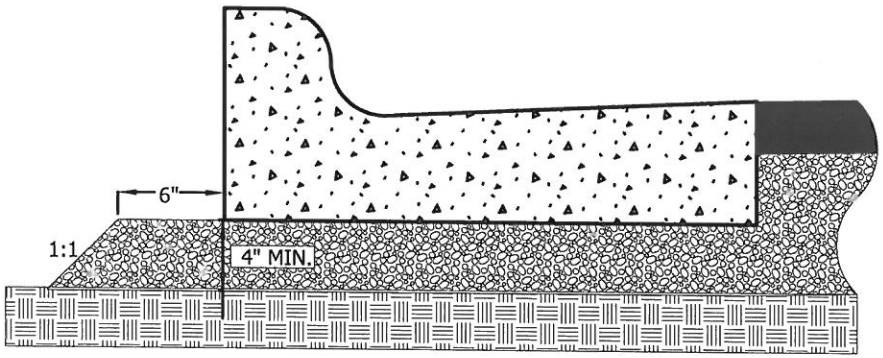

NOTES:

1) CONCRETE SHALL BE 3,000 PSI.
2) CONTRACTION JOINTS SHALL BE SPACED AT 10' INTERVALS.
3) EXPANSION JOINTS SHALL BE SPACED AT 50' INTERVALS.
4) FINISH ALL CONCRETE WITH CURING COMPOUND.
5) SEAL ALL CONTRACTION AND EXPANSION JOINTS.
6) 24" CURB AND GUTTER MAY BE APPROVED BY THE CITY.

CONCRETE CURB AND GUTTER

DATE:	REVISIONS

STANDARD DETAIL

DATE: 10-03-16

SHEET 1 OF 1

STD. No. R-4.08

CITY OF CLAREMONT, NORTH CAROLINA · 1893 ·

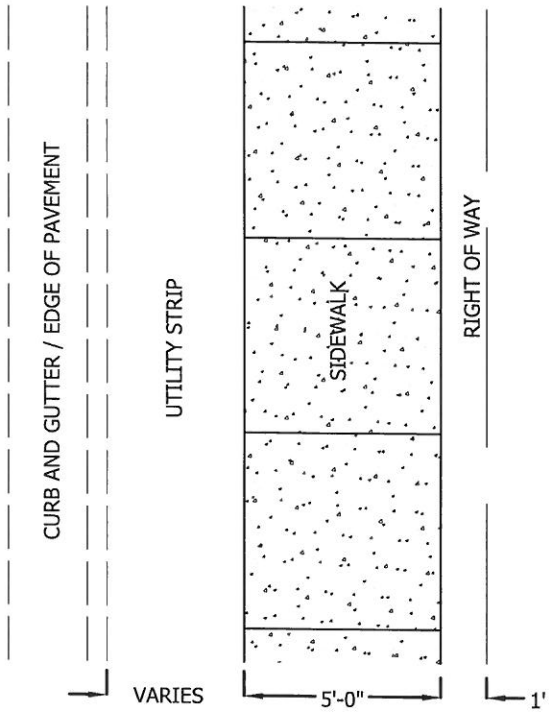

PLAN

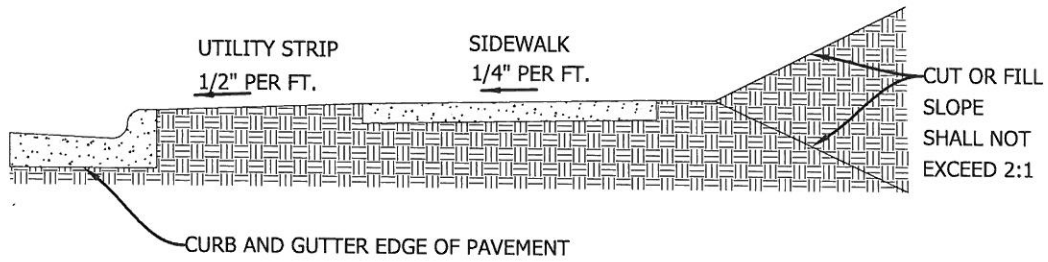

TYPICAL SECTION

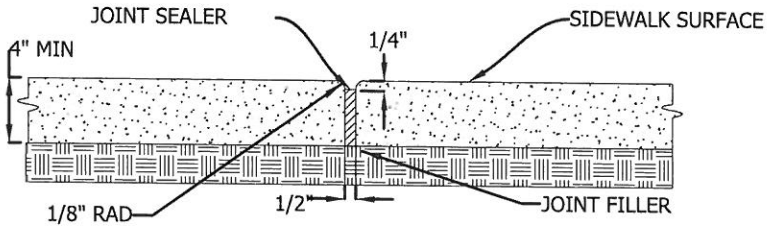

TRANSVERSE EXPANSION JOINT

NOTES:

1) TRANSVERSE EXPANSION JOINTS SHALL BE PLACED AT EACH FIFTH CONTRACTION JOINT.
2) CONTRACTION JOINTS SHALL BE SPACED EQUAL TO THE WIDTH OF THE SIDEWALK.
3) ALL CONCRETE TO BE FINISHED WITH CURING COMPOUND.
4) SIDEWALK TO BE 6" THICK ACROSS DRIVEWAYS.

CONCRETE SIDEWALK

DATE:	REVISIONS

STANDARD DETAIL

DATE: 10-03-16

SHEET 1 OF 1

STD. No. R-4.09

CITY OF CLAREMONT, NORTH CAROLINA · 1893 ·

ISOMETRIC VIEW

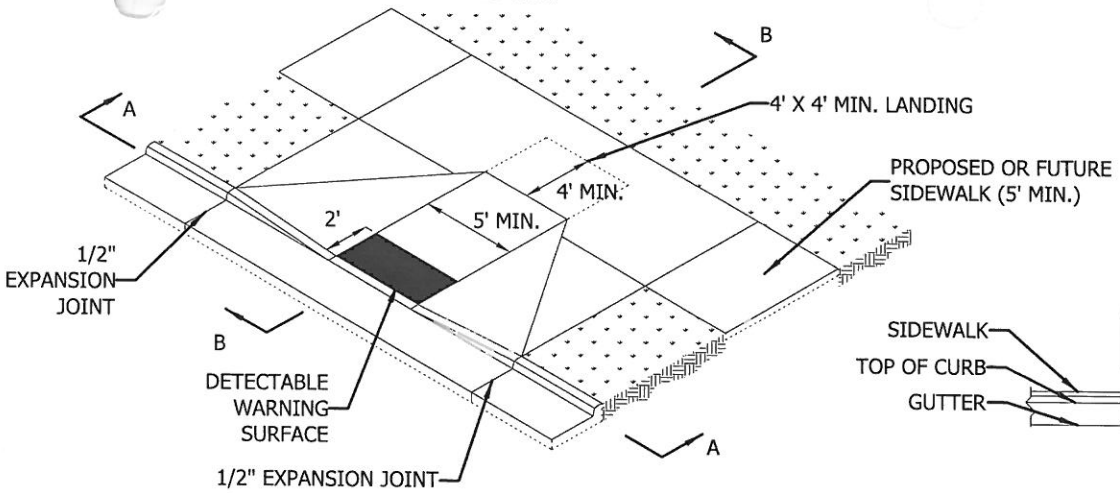

SECTION B-B

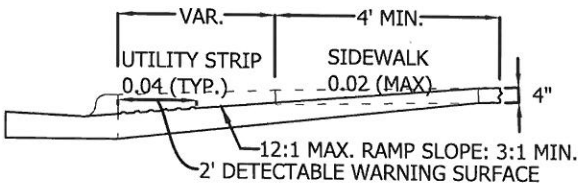

SECTION A-A

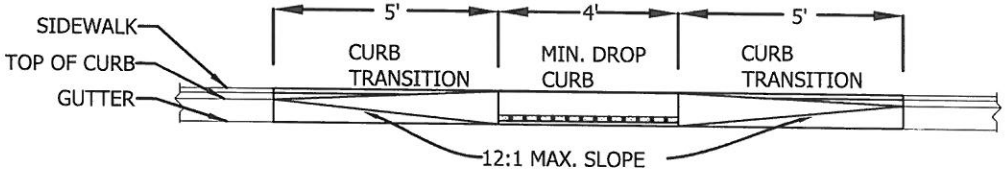

DETECTABLE WARNING DOMES

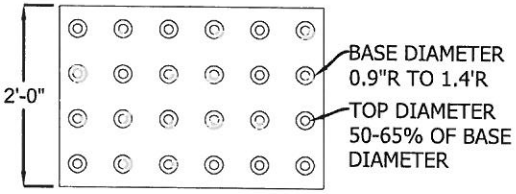

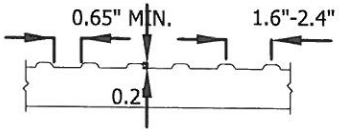

SECTION B-B

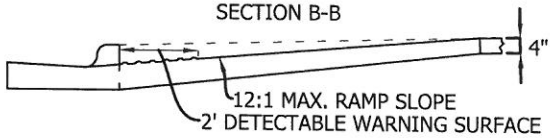

ISOMETRIC VIEW

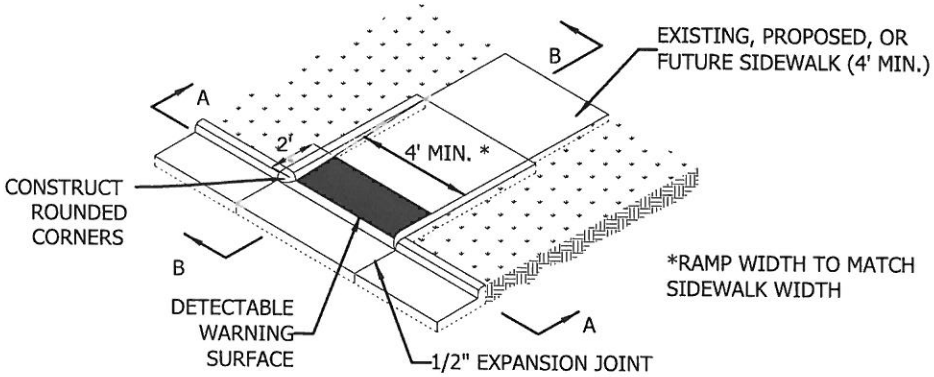

SECTION A-A

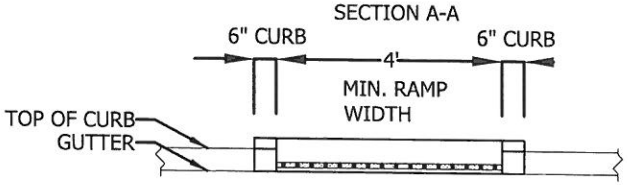

CURB RAMP

DATE:	REVISIONS

STANDARD DETAIL

DATE: 10-03-16

SHEET 1 OF 2

STD. No. R-4.10

CITY OF CLAREMONT, NORTH CAROLINA · 1893 ·

NOTES:

1) RAMPS WITH FLARED SIDES WILL BE USED WHEN NEEDED FOR PEDESTRIAN CIRCULATION (SEE DETAIL STD. No.R-4.10 SHEET 1 OF 2).
2) RAMPS WITH RETURNED CURB WILL BE USED WHEN FLARED SIDES ARE NOT NEEDED FOR PEDESTRIAN CIRCULATION.
3) DETECTABLE WARNING DOMES WILL COVER 2'-0" LENGTH AND FULL WIDTH OF THE RAMP FLOOR (SEE DETAIL STD. No.R-4.10 SEET 1 OF 2).
4) DETECTABLE WARNING DOMES WILL CONTRAST VISIBILITY WITH ADJOINING SURFACE, EITHER LIGHT-ON-DARK OR DARK-ON-LIGHT SEQUENCE.
5) CONSTRUCT THE RAMP SURFACE TO BE STABLE, FIRM AND SLIP RESISTANT.
6) COORDINATE THE CURB RAMP AND THE PEDESTRIAN CROSSWALK MARKINGS SO 4' X 4' CLEAR SPACE AT THE BASE OF THE CURB RAMP WILL FALL WITHIN THE PEDESTRIAN CROSSWALK LINES.
7) SET BACK DISTANCE FROM THE INSIDE CROSSWALK MARKING TO NEAREST EDGE OF TRAVEL LANE IS 4' MINIMUM.
8) TERMINATE PARKING A MINIMUM OF 20' BACK OF A PEDESTRIAN CROSSWALK.
9) CONSTRUCT CURB RAMPS A MINIMUM OF 4' WIDE.
10) CONSTRUCT THE RUNNING SLOPE OF THE RAMP 8.33% MAXIMUM.
11) ALLOWABLE CROSS SLOPE ON SIDEWALKS AND CURB RAMPS WILL BE 2% MAXIMUM.
12) CONSTRUCT THE SIDE FLARE SLOPE A MAXIMUM OF 10% MEASURED ALONG THE CURB LINE.
13) CONSTRUCT THE COUNTER SLOPE OF THE GUTTER OR STREET AT THE BASE OF THE CURB RAMP A MAXIMUM OF 5% AND MAINTAIN A SMOOTH TRANSITION.
14) CONSTRUCT LANDINGS FOR SIDEWALK A MINIMUM OF 4' X 4' WITH A MAXIMUM SLOPE OF 2% IN ANY DIRECTION.
15) CURB RAMPS WITH RETURNED CURBS MAY BE USED ONLY WHERE PEDESTRIANS WOULD NOT NORMALLY WALK ACROSS THE RAMP. THE ADJACENT SURFACE IS PLANTING OR OTHER NON-WALKING SURFACE OR THE SIDE APPROACH IS SUBSTANTIALLY OBSTRUCTED.
16) PLACE 1/2" EXPANSION JOINT WHERE THE CONCRETE CURB RAMP JOINS THE CURB.

CURB RAMP

DATE:	REVISIONS

STANDARD DETAIL

DATE: 10-03-16

SHEET 2 OF 2

STD. No. R-4.10

CITY OF CLAREMONT, NORTH CAROLINA · 1893 ·

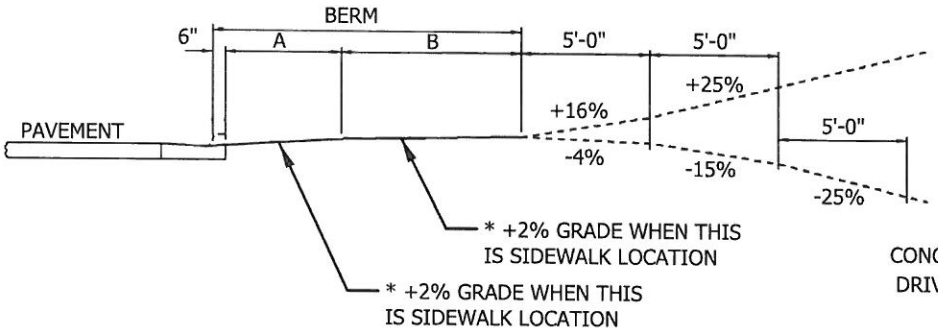

MAXIMUM DRIVEWAY GRADES

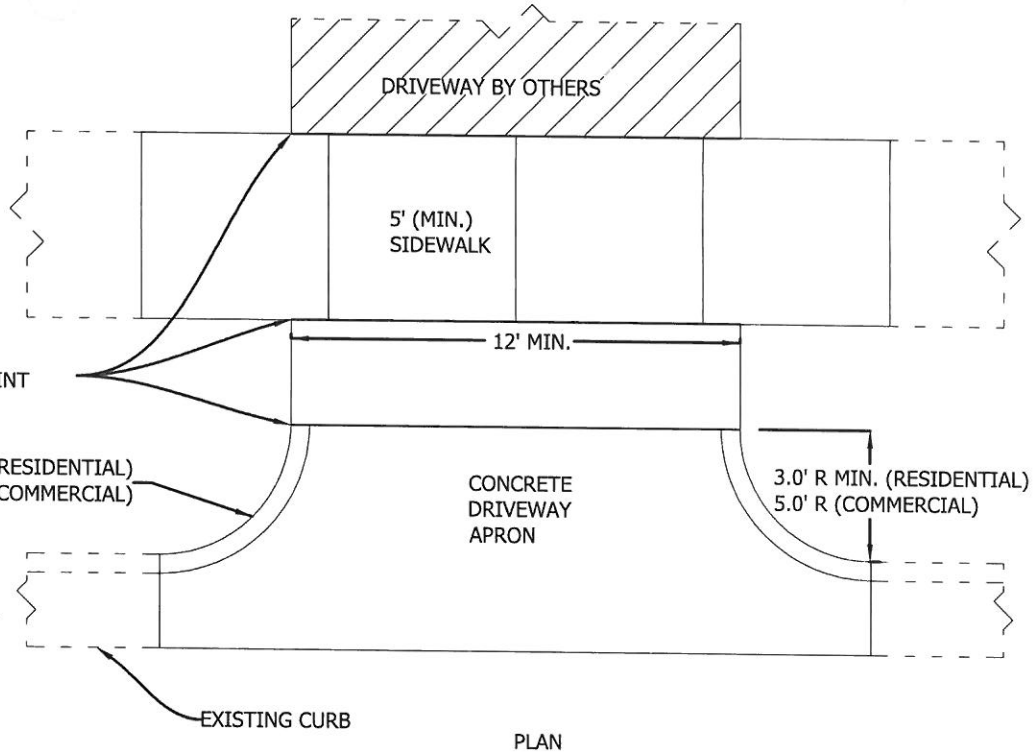

PLAN

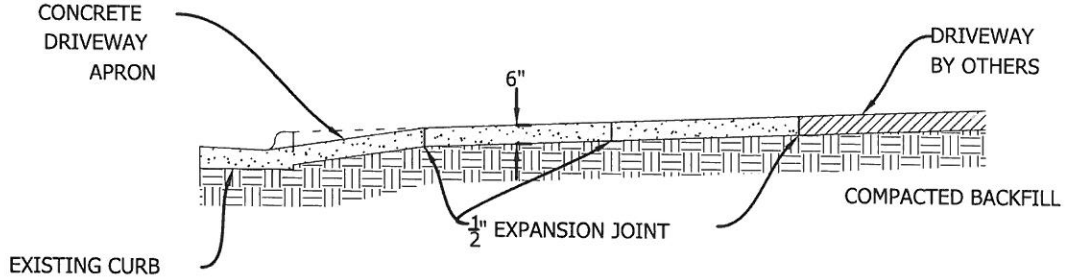

SECTION

TYPICAL DRIVEWAY APRON (CURB AND GUTTER)

DATE:	REVISIONS

STANDARD DETAIL

DATE: 10-03-16

SHEET 1 OF 1

STD. No. R-4.11

CITY OF CLAREMONT, NORTH CAROLINA · 1893 ·

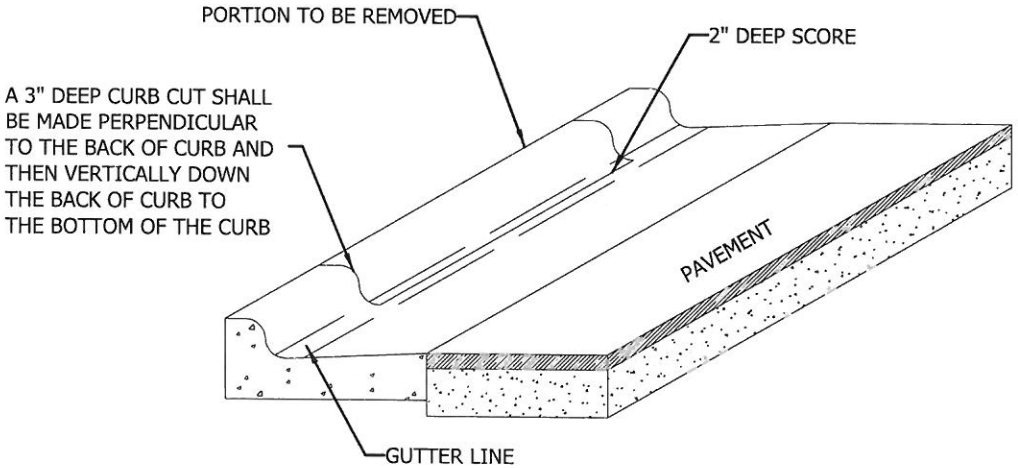

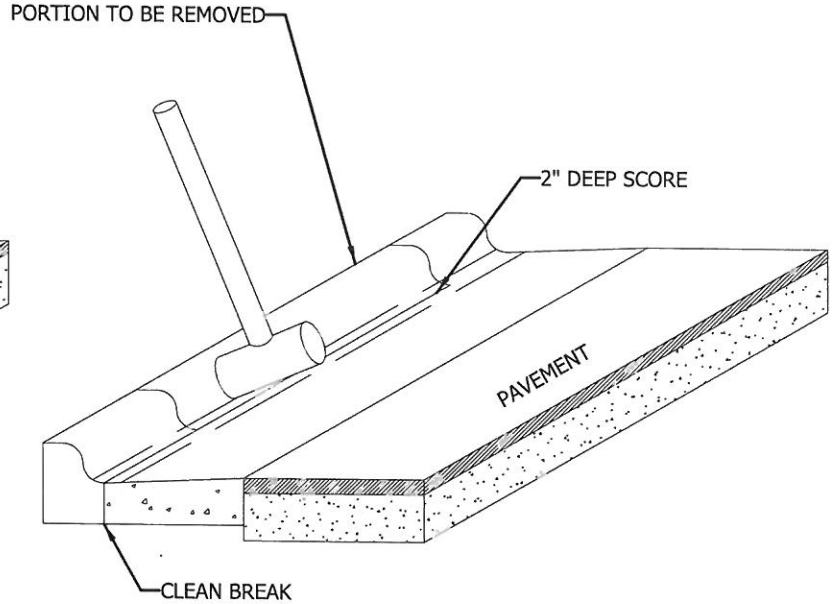

NOTE:

1) IF PERPENDICULAR CURB CUT IS WITHIN 5' FROM A JOINT, THEN THE PARALLEL CUT SHALL BE MADE TO THAT JOINT.

METHOD OF REMOVING EXISTING CURB

DATE:	REVISIONS

STANDARD DETAIL

DATE: 10-03-16

SHEET 1 OF 1

STD. No. R-4.12

CITY OF CLAREMONT, NORTH CAROLINA · 1893 ·

DRIVEWAY WIDTH MIN. 12'
MAX. 50' OR 1/3 LOT FRONTAGE
WHICHEVER IS SMALLER

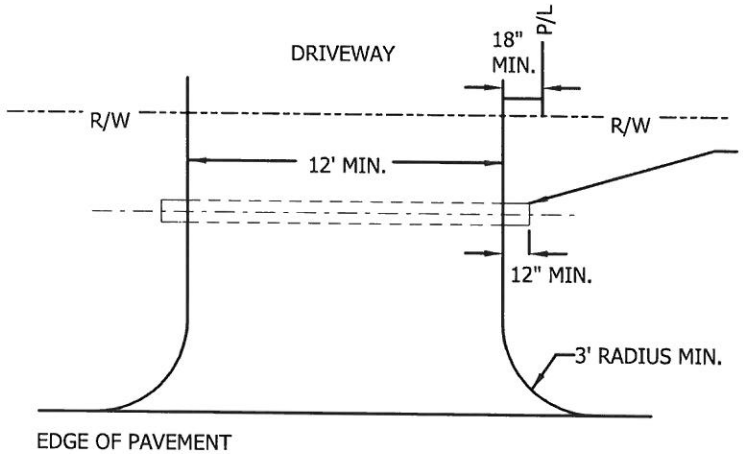

PLAN

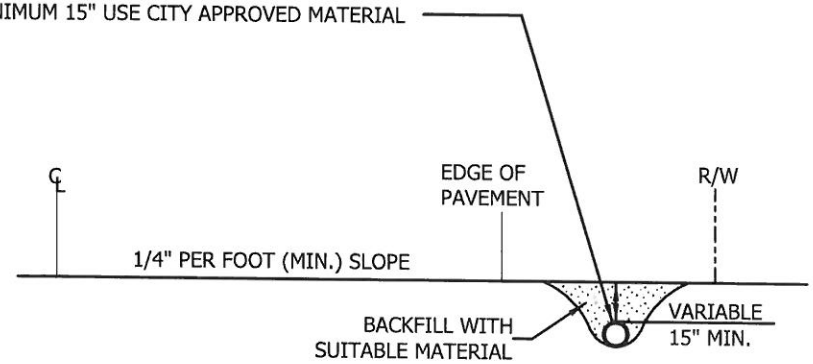

SECTION

PIPE GRADE TO BE APPROVED BY THE CITY

RESIDENTIAL DRIVEWAY APRON (NON-CURB AND GUTTER)

DATE:	REVISIONS

STANDARD DETAIL

DATE: 10-03-16
SHEET 1 OF 1
STD. No. R-4.13

CITY OF CLAREMONT, NORTH CAROLINA · 1893 ·

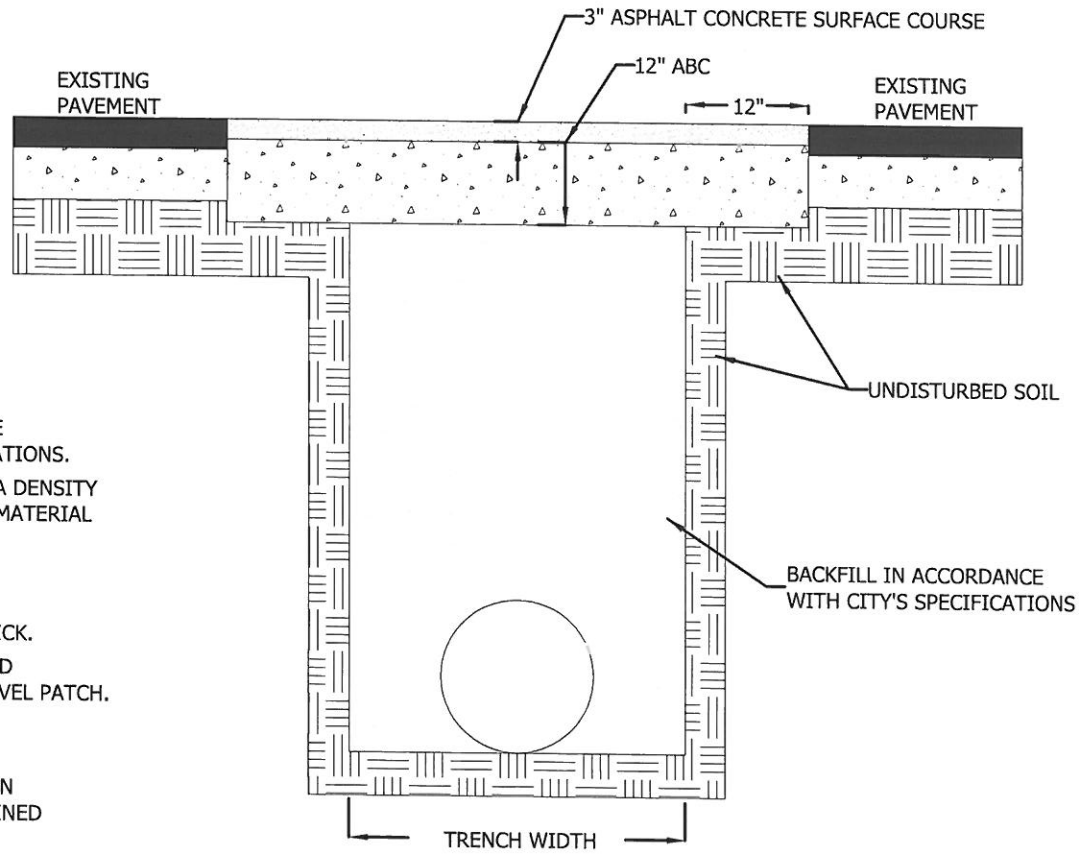

NOTES:

1) THE PAVEMENT CUT SHALL BE DEFINED BY A STRAIGHT EDGE AND CUT WITH AN APPROPRIATE SAW CUT MACHINE.
2) THE TRENCH SUBGRADE MATERIAL SHALL BE BACKFILLED WITH SUITABLE MATERIAL AND COMPACTED IN ACCORDANCE WITH THE CITY'S SPECIFICATIONS.
3) THE FINAL 1' OF FILL SHALL CONSIST OF ABC MATERIAL COMPACTED TO A DENSITY EQUAL TO 100% OF THAT OBTAINED BY COMPACTING A SAMPLE OF THE MATERIAL IN ACCORDANCE WITH AASHTO T-80 AS MODIFIED BY N.C.D.O.T.
4) THE ENTIRE THICKNESS/VERTICAL EDGE OF SAW CUT SHALL BE TACKED.
5) THE SAME DEPTH OF PAVEMENT MATERIAL WHICH EXISTS SHALL BE REINSTALLED, BUT IN NO CASE SHALL THE ASPHALT BE LESS THAN 3" THICK.
6) THE ASPHALT PAVEMENT MATERIAL SHALL BE INSTALLED AND COMPACTED THOROUGHLY WITH A SMOOTH DRUM ROLLER TO ACHIEVE A SMOOTH LEVEL PATCH.
7) ALL PAVEMENT CUTS SHALL BE REPAIRED WITHIN A MAXIMUM OF SEVEN (7) DAYS FROM THE DATE THE CUT WAS MADE.
8) IF CONDITIONS DO NOT PERMIT A PERMANENT REPAIR WITHIN THE GIVEN TIME LIMIT, PERMISSION TO MAKE A TEMPORARY REPAIR MUST BE OBTAINED FROM THE CITY.

MIN: PIPE OUTSIDE DIAMETER +9" EACH SIDE
MAX: PIPE OUTSIDE DIAMETER +12" EACH SIDE

TYPICAL PAVEMENT REPAIR

DATE:	REVISIONS

STANDARD DETAIL

DATE: 10-03-16
SHEET 1 OF 1
STD. No. R-4.14

CITY OF CLAREMONT, NORTH CAROLINA · 1893 ·

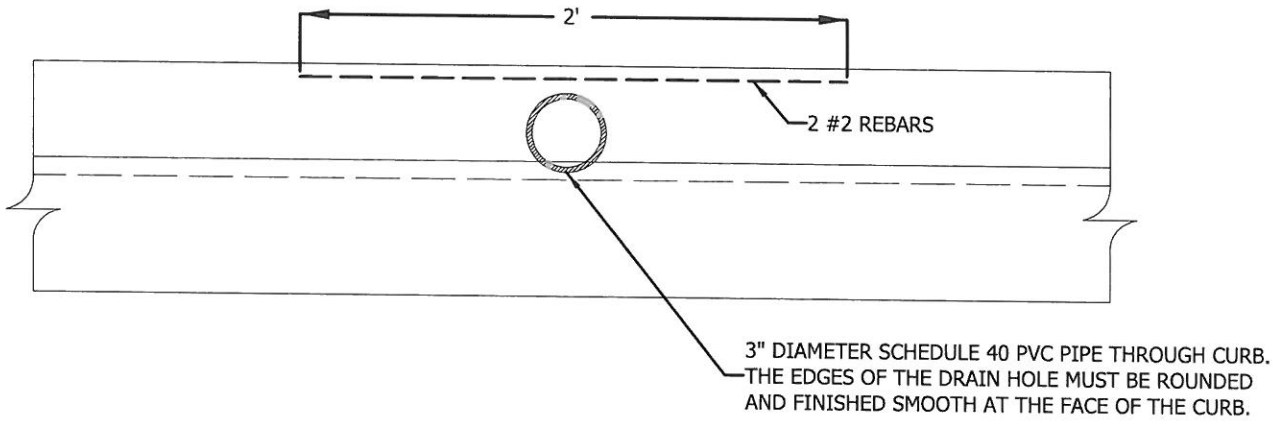

NOTES:

1) CURB DRAINS SHALL NOT BE CONSTRUCTED WITHIN 18" OF CONTRACTION OR EXPANSION JOINTS.
2) OPENING GRADE MAY VARY BETWEEN A MAXIMUM SLOPE OF 1/2" PER FOOT AND A MINIMUM OF 1/4" PER FOOT.
3) MORE THAN ONE HOLE MAY BE INSTALLED PROVIDED THE HOLES ARE LOCATED WITH 18" MINIMUM SPACING.

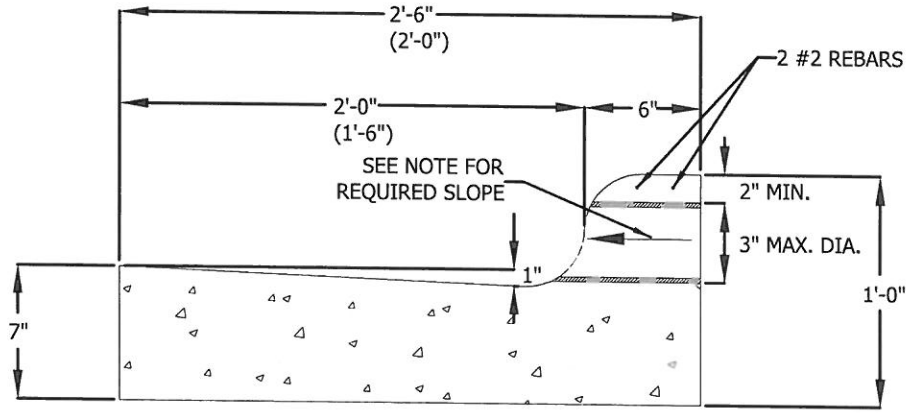

TYPICAL CURB DRAIN

DATE:	REVISIONS

STANDARD DETAIL

DATE: 10-03-16

SHEET 1 OF 1

STD. No. R-4.15

CITY OF CLAREMONT, NORTH CAROLINA · 1893 ·

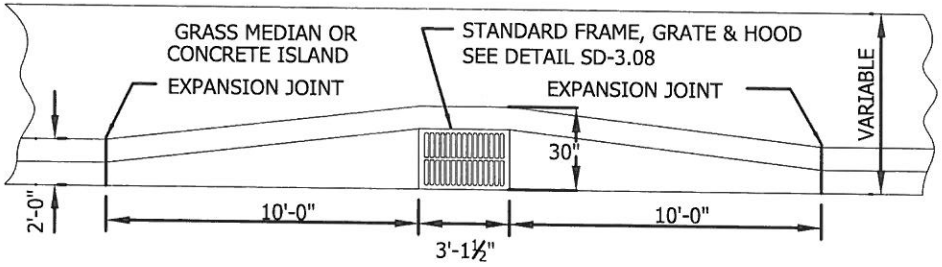

PLAN

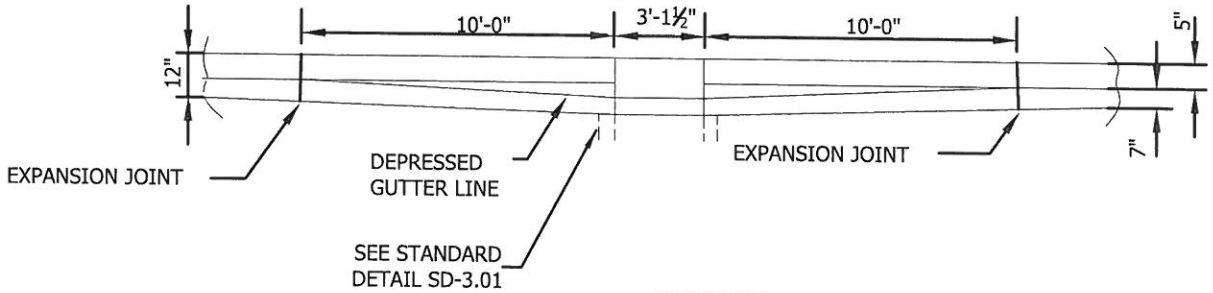

ELEVATION

ADOPTED FROM NCDOT 852.05

STANDARD CATCH BASIN TRANSITION FOR 24" VERTICAL CURB AND GUTTER

DATE:	REVISIONS

STANDARD DETAIL

DATE: 10-03-16

SHEET 1 OF 1

STD. No. R-4.16

CITY OF CLAREMONT, NORTH CAROLINA · 1893 ·

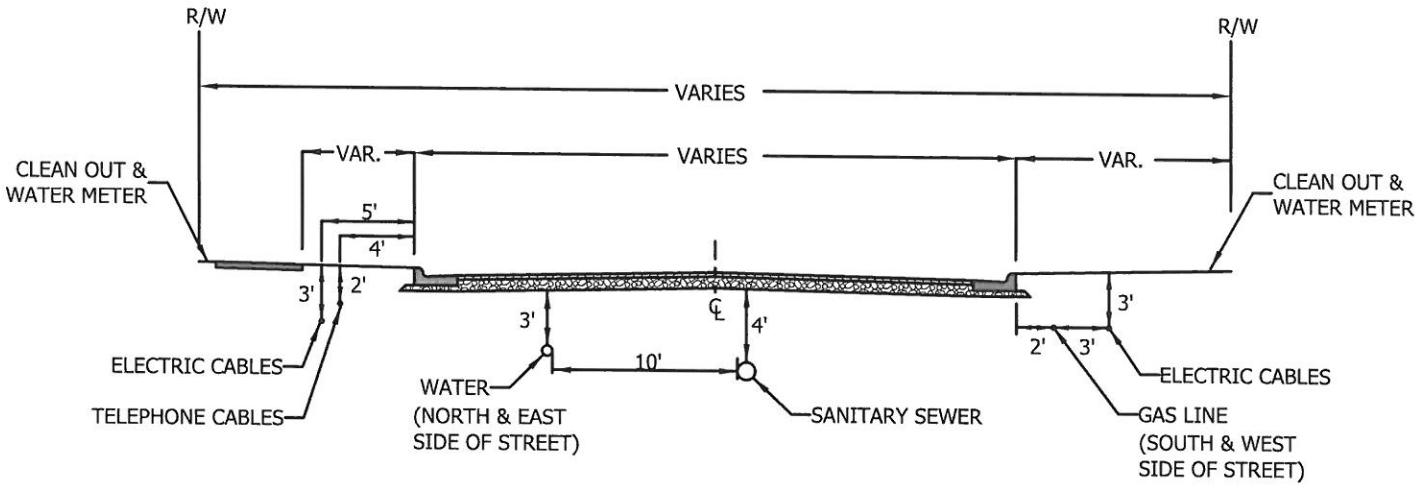

NOTES:

1) ON NON-CURB AND GUTTER STREETS ADJUSTMENTS IN THE LOCATION OF NEW UTILITIES ARE TO BE MADE AS NEEDED TO INSURE THAT NONE ARE INSTALLED IN THE ℄ OF SIDE DITCHES.

2) COORDINATE LOCATION OF ALL UTILITIES WITH THE CITY.

SUGGESTED UTILITY LOCATIONS

DATE:	REVISIONS

STANDARD DETAIL

DATE: 10-03-16

SHEET 1 OF 1

STD. No. R-4.17

CITY OF CLAREMONT, NORTH CAROLINA · 1893 ·

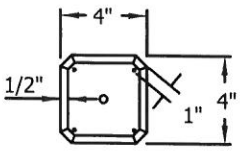

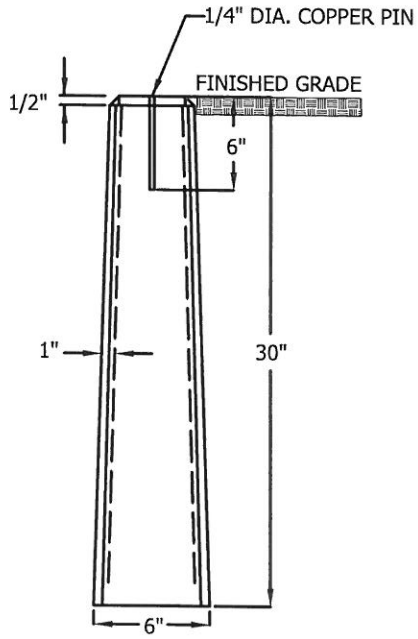

3/8" DIA. STEEL REINFORCED BAR 2'-3" LONG TO BE PLACED IN EACH CORNER

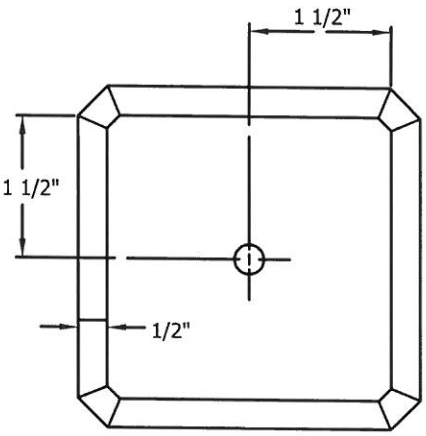

THE RIGHT-OF-WAY MARKER SHALL BE SET THAT THE RIGHT-OF-WAY LINE PASSES THROUGH THE CENTER OF THE COPPER PIN.

STANDARD RIGHT OF WAY MARKER

DATE:	REVISIONS

STANDARD DETAIL

DATE: 10-03-16

SHEET 1 OF 1

STD. No. R-4.18

CITY OF CLAREMONT, NORTH CAROLINA · 1893 ·