Standard Detail Index

SECTION 3 ♦ STORMWATER DRAINAGE SYSTEM

Detail #	Detail Description
SD-3.01	Standard Catch Basin 15" thru 54" Pipe
SD-3.02	Traffic Bearing Precast Drainage Structure
SD-3.03	Standard Traffic Bearing Junction Box (15" thru 36")
SD-3.04	Pre-Cast Manhole Junction Box
SD-3.05	Non-Traffic Bearing Pre-Cast Drainage Structure (Solid and Waffle Wall)
SD-3.06	Non-Traffic Bearing Drop Inlet
SD-3.07	Non-Traffic Bearing Drop Inlet with Grate and Frame
SD-3.08	Standard Frame, Grates and Hood
SD-3.09	Non-Traffic Bearing Drop Inlet Frame and Grate
SD-3.10	Rainfall Intensity
SD-3.11	Reinforced Concrete Rigid Pipe Trench
SD-3.12	Reinforced Precast Concrete Flared End Section
SD-3.13	Flared End Section Outlet Treatment
SD-3.14	Standard Precast Concrete Manhole
SD-3.15	Standard Manhole Ring and Cover

♦ ♦ ♦ ♦ ♦

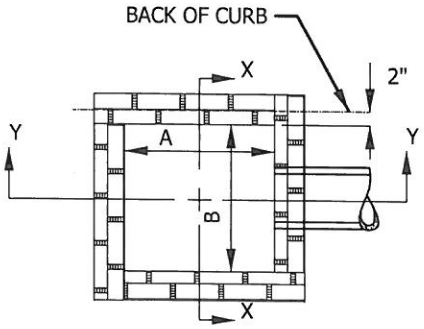

PLAN

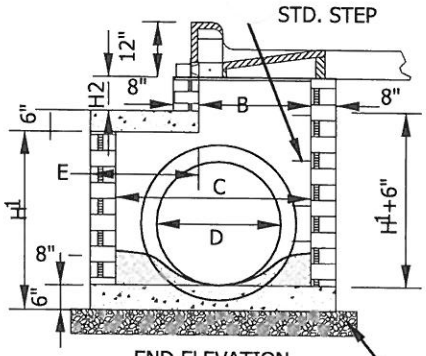

END ELOCATION

WHERE 30' TO 36" PIPE IS USED.
SECTION - JJ

6" MIN. #67 STONE BEDDING

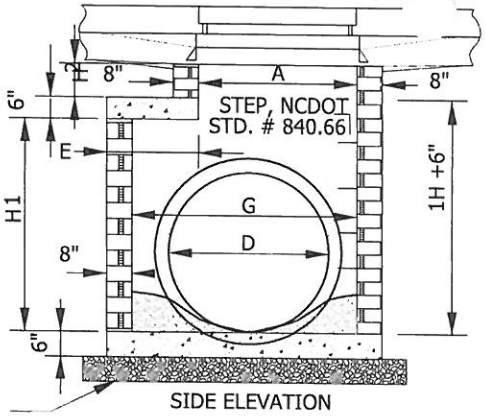

SIDE ELEVATION

WHERE 42" TO 54" PIPE IS USED.
SECTION - MM

NOTES:

1) MORTAR JOINTS 1/2" 1/8" THICK.
2) 3000 P.S.I. CONCRETE TO BE USED.
3) THE POURING OF FLOOR SLAB TO BE ACCOMPLISHED BY FORMING.
4) ALL CATCH BASINS OVER 3' - 6" IN DEPTH SHALL BE PROVIDED WITH STEPS 16" O.C.
5) CONCRETE BLOCKS ONLY, CLAY BRICKS SHALL NOT BE USED.
6) FOR 8'-0" IN HEIGHT OR LESS, USE 8" WALL. OVER 8'-0" IN HEIGHT USE 12" WALL TO 6'-0" FROM TOP OF WALL, 8" WALL FOR THE REMAINING 6'-0".
7) INVERTS SHALL BE SHAPED TO FORM A SMOOTH, REGULAR SURFACE, SLOPED TO PREVENT SEDIMENTATION.
8) LOCATE STEPS ON NARROW SIDE OF STRUCTURE.
9) USE TYPE "E", "F", & "G" GRATE UNLESS OTHERWISE INDICATED.
10) PRE-CAST BOXES MADE OF 4000 P.S.I. CONCRETE MAY BE USED IN LIEU OF CONCRETE BLOCK MASONRY CONCSTRUCTION. PRE-CAST UNITS SHALL BE AS SHOWN ON DETAIL SD-3.02

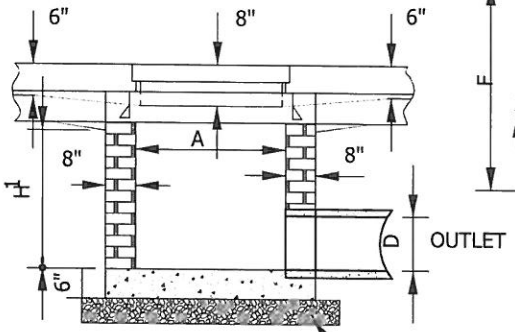

SECTION - YY

6" MIN. #67 STONE BEDDING

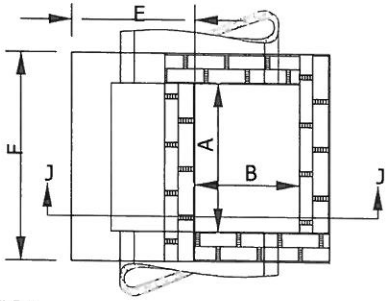

PLAN

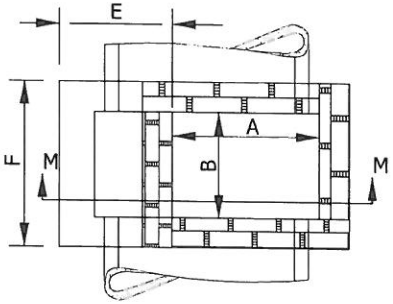

PLAN

STANDARD FRAME, GRATE, & HOOD

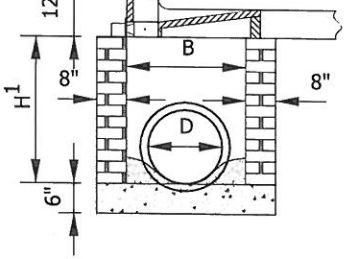

SECTION - XX

ADOPTED FROM NCDOT 840.01 1 OF 2

STANDARD CATCH BASIN 15" THRU 54" PIPE

DATE:	REVISIONS

STANDARD DETAIL

DATE: 10-03-16

SHEET 1 OF 2

STD. No. SD-3.01

CITY OF CLAREMONT, NORTH CAROLINA · 1893 ·

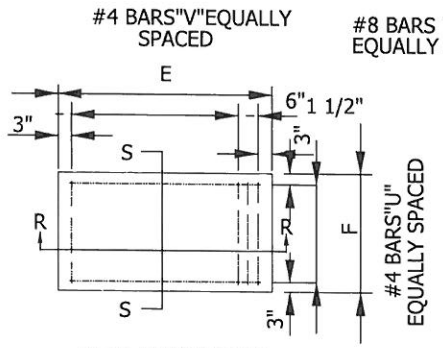

PLAN OF TOP SLAB

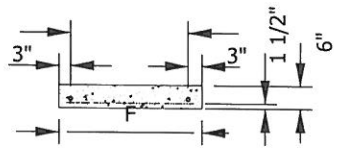

SECTION - SS

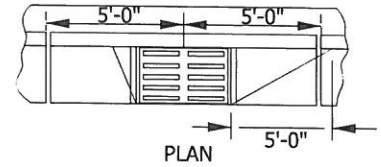

PLAN

CURB AND GUTTER
WITH CATCH BASIN ON STEEP GRADES

USE ON FLAT GRADES
2% AND UNDER

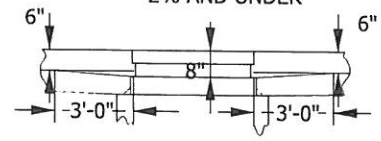

DEPRESSED GUTTER LINE

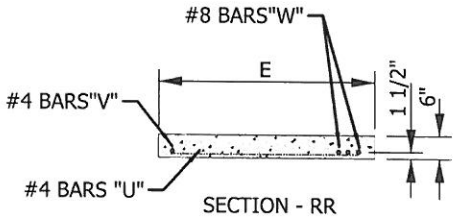

SECTION - RR

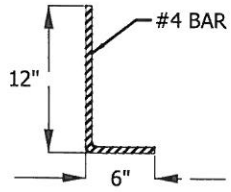

DOWEL

ELEVATION
NORMAL CURB AND GUTTER ON LIGHT GRADES

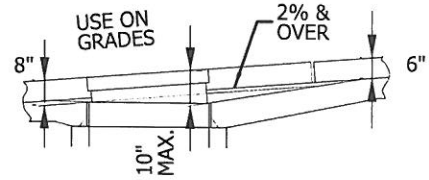

NORMAL GUTTER LINE

ELEVATION
NORMAL CURB AND GUTTER ON STEEP GRADES

DIMENSIONS AND QUANTITIES FOR CONCRETE BLOCK CATCH BASIN

DIMENSIONS OF BOX AND PIPE							COVER DIMENSION		REINFORCING							* CUBIC YARDS OF CONCRETE IN BOX			CONCRETE BLOCK		DEDUCTIONS FOR ONE PIPE	
PIPE	SPAN	WIDTH	WIDTH	SPAN	HEIGHT	HEIGHT			BARS-U		BARS-V		BARS-W		TOTAL				H^1			
D	A	B	C	G	MIN. H^1	H^2	E	F	NO	LENGTH	NO	LENGTH	NO	LENGTH	LBS.	TOP SLAB	FLOOR	TOTAL	CU. YDS.	PER FT.HT.	C.M.	R.C.
15"	3'-0"	2'-2"	-	-	3'-0"	-	-	-	-	-	-	-	-	-	-	-	0.281	0.281	0.963	0.321	0.0308	0.047
18"			-	-	3'-3"	-	-	-	-	-	-	-	-	-	-	-	0.281	0.281	1.043	ABOVE	0.0442	0.065
24"			-	-	3'-9"	-	-	-	-	-	-	-	-	-	-	-	0.281	0.281	1.204	MIN. H^1	0.0784	0.121
30"			3'-4"	-	4'-3"	VARIABLE	1'-2"	4'-4"	4	1'-6"	3	4'-1"	3	4'-1"	45	0.147	0.374	0.521	1.606		0.1224	0.184
36"			3'-10"	-	4'-9"		1'-8"	4'-4"	4	2'-0"	4	4'-1"	3	4'-1"	49	0.187	0.415	0.602	1.914	0.321	0.1760	0.261
42"			-	4'-5"	5'-3"		1'-5"	3'-6"	4	1'-9"	3	3'-3"	3	3'-3"	38	0.135	0.373	0.508	2.152		0.2400	0.371
48"			-	5'-0"	5'-9"		2'-0"	3'-6"	4	2'-6"	4	3'-3"	3	3'-3"	41	0.173	0.410	0.583	2.415	H^2	0.3131	0.477
54"	3'-0"	2'-2"	-	5'-7"	6'-3"		2'-7"	3'-6"	4	3'-0"	6	3'-3"	3	3'-3"	47	0.211	0.448	0.659	2.806		0.3958	0.595

ADOPTED FROM NCDOT 840.01 2 OF 2

STANDARD CATCH BASIN 15" THRU 54" PIPE

DATE:	REVISIONS

STANDARD DETAIL

DATE: 10-03-16

SHEET 2 OF 2

STD. No. SD-3.01

CITY OF CLAREMONT, NORTH CAROLINA · 1893 ·

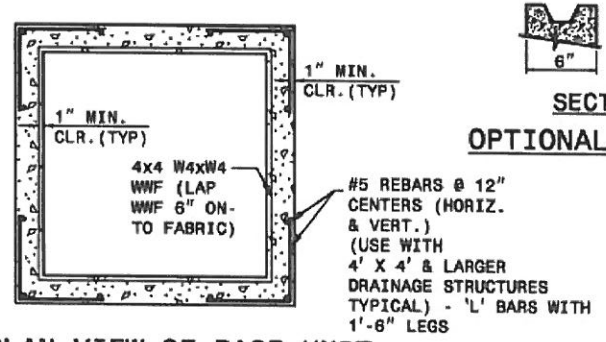

PLAN VIEW OF BASE UNIT

SECTION VIEWS

OPTIONAL JOINT DETAILS

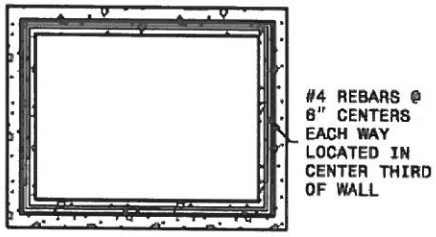

PRECAST RISER PLAN

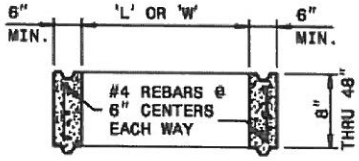

TYPICAL PRECAST RISER SECTION

NOTES:

1) INSTALL FOR PRE-CAST DRAINAGE STRUCTURES IN ACCORDANCE WITH NCDOT STANDARD SPECIFICATION SECTION 840 AND CITY SPECIFICATIONS.
2) USE 4000 P.S.I. MINIMUM COMPRESSIVE STRENGTH CONCRETE.
3) USE ASTM A615 GRADE 60 REINFORCING STEEL. USE ASTM A185 WELDED WIRE FABRIC (WWF).
4) LIMIT MAXIMUM DEPTH TO TOP OF BOTTOM SLAB TO 15'-0"
5) PLACE LIFT HOLES OR PINS IN ACCORDANCE WITH OSHA STANDARD 1926.704.
6) ORIENT STRUCTURES SO THAT CORNERS WILL NOT BE CUT OR MODIFIED UNLESS ALLOWED BY DETAIL IN PLANS.
7) PRE-CAST ALL ELEMENTS TO MEET ASTM C913.
8) FRAME AND GRATE HEIGHT MAY BE ADJUSTED WITH CONCRETE OR BRICK.
9) PROVIDE PRE-CAST STRUCTURES OVER 4'-0" IN DEPTH WITH STEPS 16" ON CENTERS.
10) WELDED WIRE FABRIC MAY BE SUBSTITUTED FOR REBAR IF THE SAME MIN. AREA OF STEEL IS PROVIDED.
11) SEAL JOINTS WITH AN APPROVED SEALANT.
12) LIMIT MAXIMUM STRUCTURE SIZE INSIDE CLEAR DIMENSIONS TO 6'-0" X 6'-0".
13) THE OUTSIDE PIPE DIAMETER PLUS 2" IS THE MINIMUM STRUCTURE SIZE OR THE OPENING REQUIRED FOR GRATE AND FRAME WHICHEVER IS GREATER.
14) ROUND MANHOLE MAY BE USED IN LIEU OF SQUARE PROVIDED 2 EXTRA #5'S ARE PLACED ON EVERY SIDE NOT ADJACENT TO A WALL.

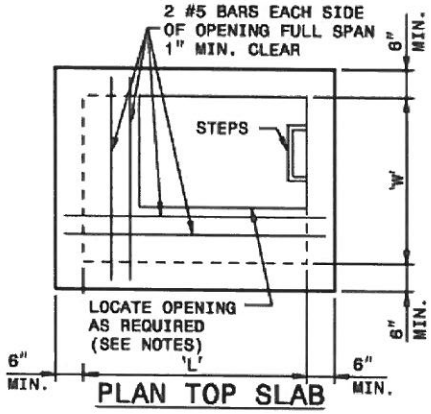

PLAN TOP SLAB

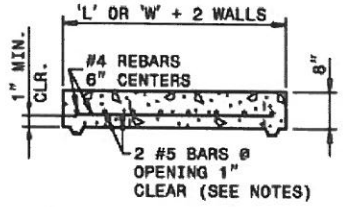

TYPICAL SECTION TOP SLAB

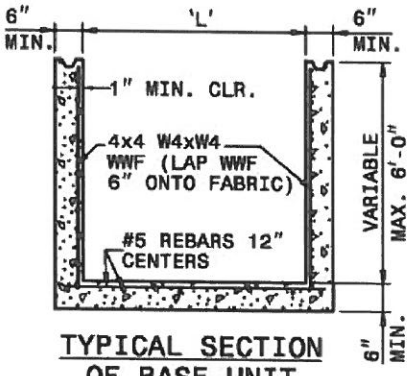

TYPICAL SECTION OF BASE UNIT

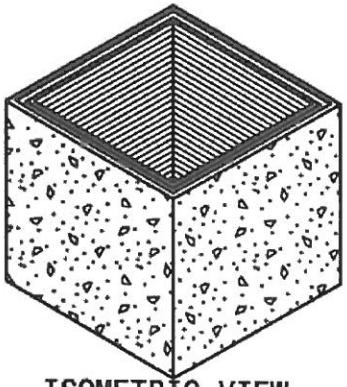

ISOMETRIC VIEW

TRAFFIC BEARING PRECAST DRAINAGE STRUCTURE

DATE:	REVISIONS

STANDARD DETAIL

DATE: 10-03-16

SHEET 1 OF 1

STD. No. SD-3.02

CITY OF CLAREMONT, NORTH CAROLINA · 1893 ·

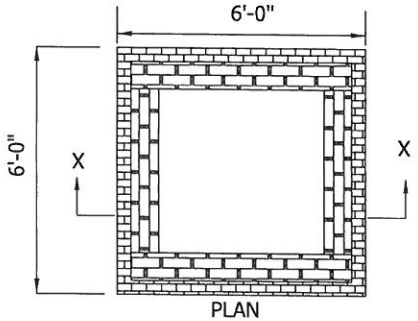

PLAN
(WITHOUT TOP)

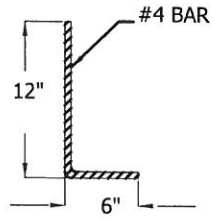

DOWEL "C"

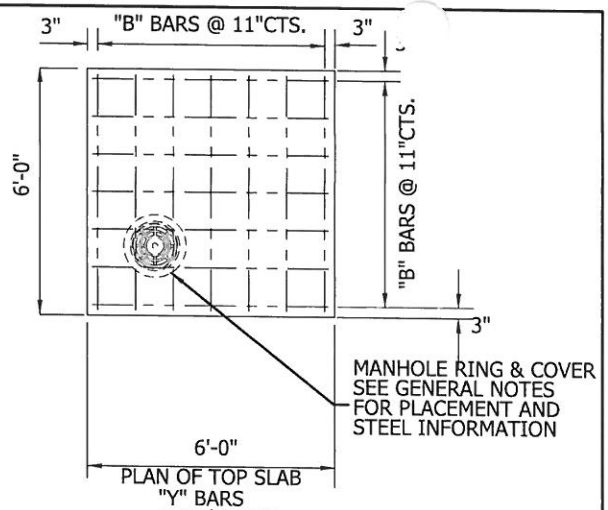

PLAN OF TOP SLAB
"Y" BARS
@ 11¼" CTS.

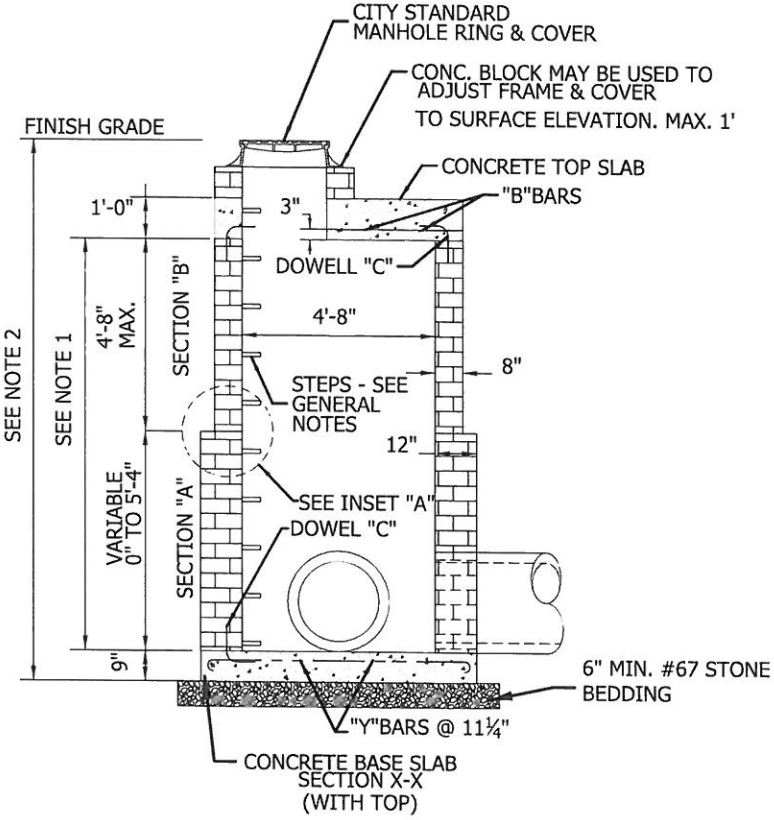

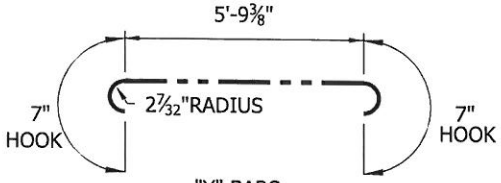

"Y" BARS

BAR DIMENSIONS ARE OUT TO OUT

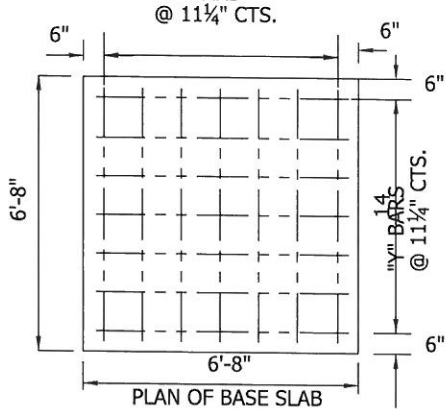

PLAN OF BASE SLAB

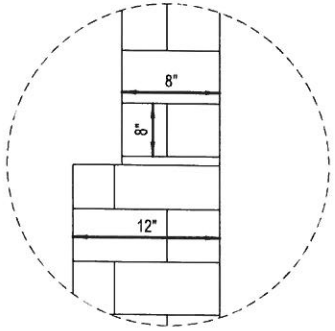

INSET "A"

CONCRETE BLOCK
N.T.S.

ADOPTED FROM NCDOT 840.34 1 OF 2

STANDARD TRAFFIC BEARING JUNCTION BOX (15" THRU 36")

DATE:	REVISIONS

STANDARD DETAIL

DATE: 10-03-16

SHEET 1 OF 2

STD. No. SD-3.03

CITY OF CLAREMONT, NORTH CAROLINA · 1893 ·

BILL OF MATERIALS				
BAR	QTY.	SIZE	LENGTH	WEIGHT
A	8	#5	1'-2"	9.7
B	14	#5	5'-6"	80.3
C	26	#4	1'-6"	26.1
Y	14	#5	6'-11 3/8"	101.5
STEEL TOTAL WEIGHT				217.6
CU. YDS. CLASS "AA" CONC.				2.6
CU. YDS. CONC. BLOCK/FT. HT. (8")				0.53
CU. YDS. CONC. BLOCK/FT. HT. (12")				0.84

GENERAL NOTES:

1) CONCRETE BLOCKS ONLY. CLAY BRICK SHALL NOT BE USED.
2) PRECAST UNITS MADE OF 4000 P.S.I. CONCRETE MAY BE USED IN LIEU OF CONCRETE BLOCK MASONRY CONSTRUCTION. PRE-CAST UNITS SHALL BE DESIGNED BY A PROFESSIONAL ENGINEER AND SUBMITTED TO THE CITY FOR APPROVAL.
3) STANDARD MANHOLE RING AND COVER SHALL BE INSTALLED IN POSITION AS DIRECTED BY THE CITY. ALL REBAR CROSSING THIS OPENING SHALL BE CUT OR BENT TO ALLOW 2" MINIMUM CONCRETE COVERAGE. THE OPENING SHALL BE ENCLOSED WITH 8 "A" BARS TIED TO THE REBAR MAT AND SET SO A MINIMUM OF A 3" CONCRETE COVERAGE IS OBTAINED.
4) JUNCTION BOXES OVER 3'-6" IN DEPTH WITH MANHOLES SHALL REQUIRE STEPS TO BE PLACED ON 16" CENTERS.
5) DOWEL "C" BARS SHALL BE SPACED AT A MINIMUM OF 12" CENTERS.
6) MAXIMUM DEPTH OF THIS UNIT AS SHOWN IS 12'. SEE SECTION 3 OF STANDARD SPECIFICATIONS.

NOTE 1:
SECTION "B" OF THE PROPOSED WALL SHALL BE 8" THICK.
SECTION "A" SHALL BE 12" THICK.

NOTE 2:
IF PROPOSED STRUCTURE EXCEEDS 12'-0" VERTICAL HEIGHT A DESIGN WILL BE REQUIRED FOR APPROVAL.

NOTE 3:
ALL REINFORCING STEEL SHALL BE SINGLE MAT; EXCEPT DOUBLE MAT STEEL MAY BE USED IN LIEU OF HOOK BARS IN BASE SLAB.

ADOPTED FROM NCDOT 840.34 2 OF 2

STANDARD TRAFFIC BEARING JUNCTION BOX (15" THRU 36")

DATE:	REVISIONS

STANDARD DETAIL

DATE: 10-03-16
SHEET 2 OF 2
STD. No. SD-3.03

CITY OF CLAREMONT, NORTH CAROLINA · 1893 ·

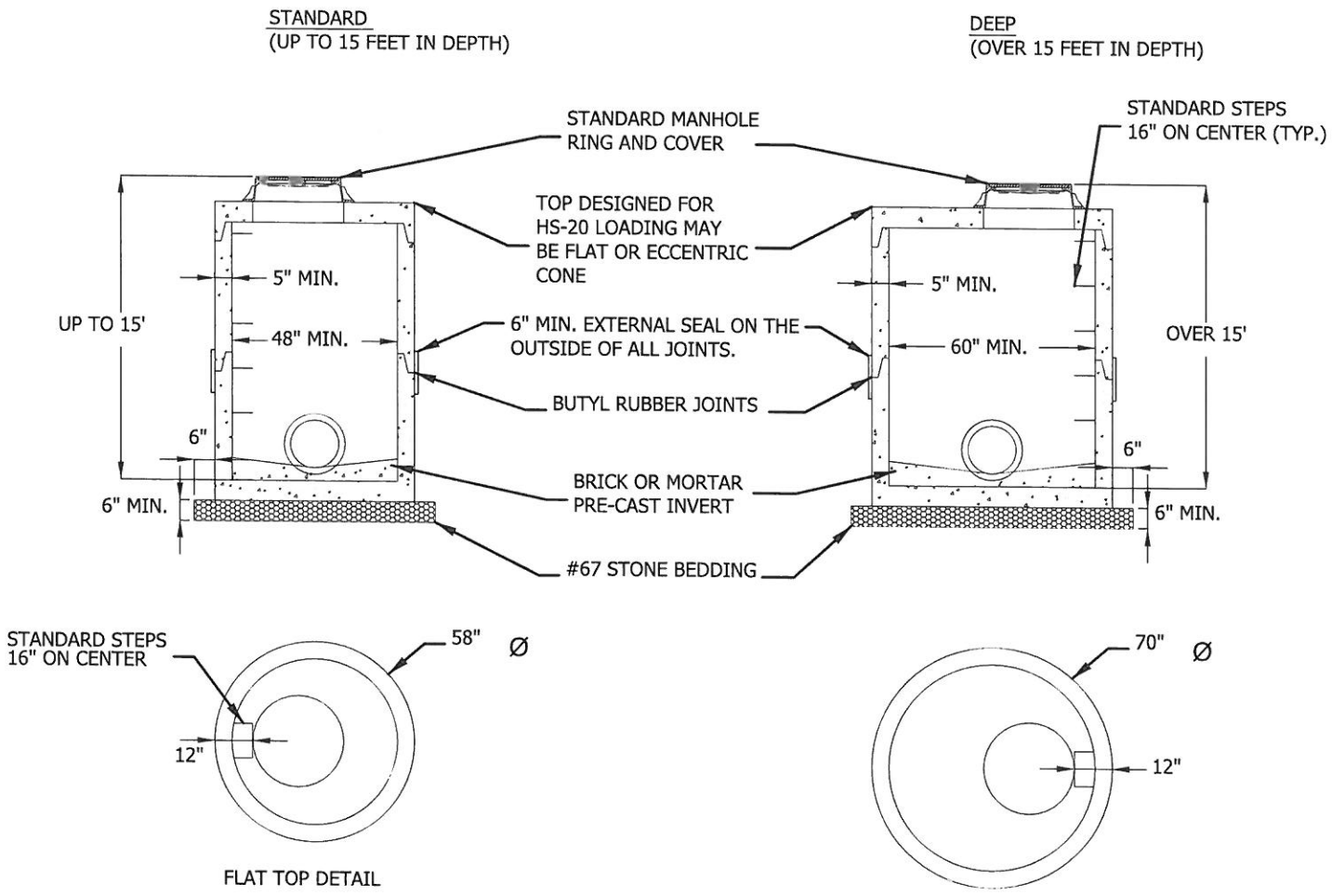

SEE STANDARD SPECIFICATIONS
SECTION 3 PARAGRAPH 2.03
FOR MH REQUIREMENTS

PRE-CAST MANHOLE JUNCTION BOX

DATE:	REVISIONS

STANDARD DETAIL

DATE: 10-03-16

SHEET 1 OF 1

STD. No. SD-3.04

CITY OF CLAREMONT, NORTH CAROLINA · 1893 ·

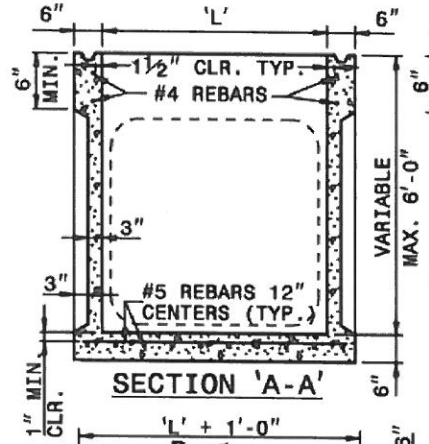

SECTION 'A-A'

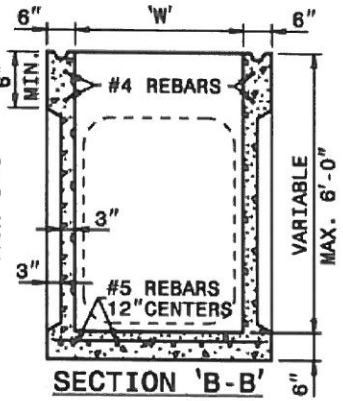

SECTION 'B-B'

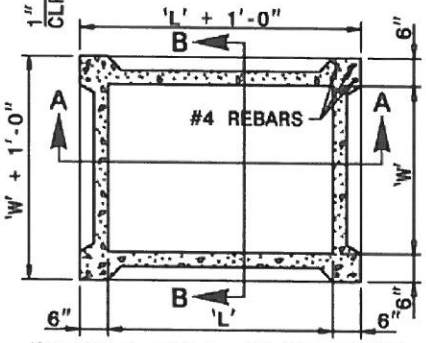

WAFFLE WALL PLAN VIEW

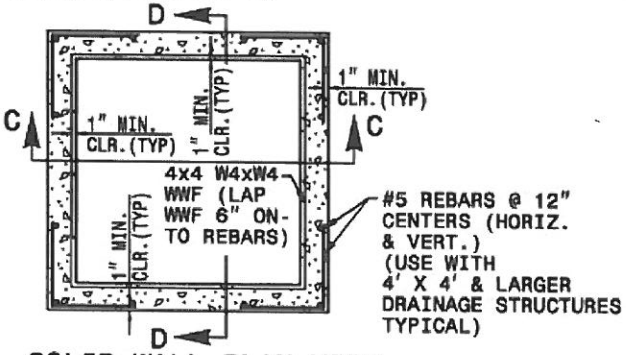

SOLID WALL PLAN VIEW

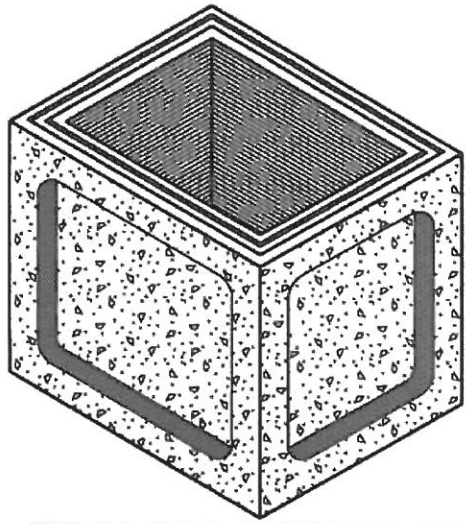

WAFFLE WALL ISOMETRIC VIEW

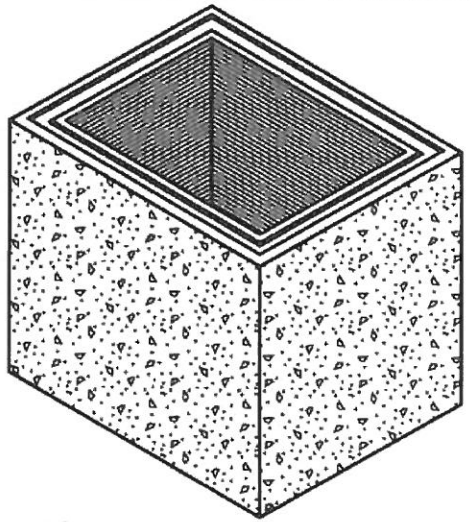

SOLID WALL ISOMETRIC VIEW

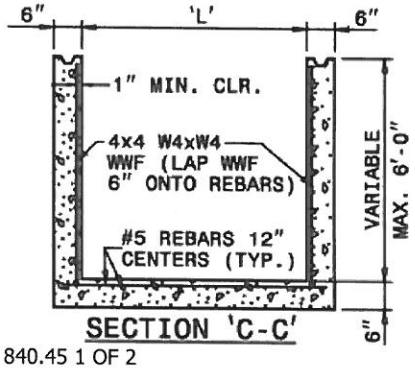

SECTION 'C-C'

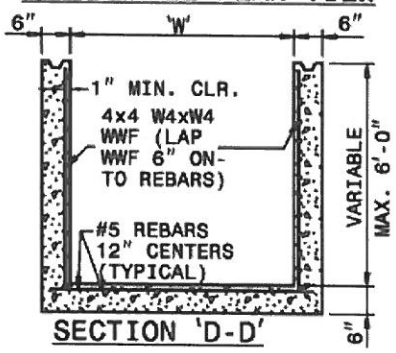

SECTION 'D-D'

ADOPTED FROM NCDOT 840.45 1 OF 2

NON-TRAFFIC BEARING PRE-CAST DRAINAGE STRUCTURE (SOLID AND WAFFLE WALL)

DATE:	REVISIONS

STANDARD DETAIL

DATE: 10-03-16

SHEET 1 OF 2

STD. No. SD-3.05

CITY OF CLAREMONT, NORTH CAROLINA · 1893 ·

* INSTALL PRECAST DRAINAGE STRUCTURES IN ACCORDANCE WITH N.C.D.O.T. SPECIFICATIONS SECTION 840 AND CITY REQUIREMENTS.
* DO NOT PLACE PRECAST DRAINAGE STRUCTURES UNDER TRAFFIC OR WHERE TRAFFIC WILL BE DETOURED.
* USE 4000 PSI CONCRETE.
* PROVIDE ALL REINFORCING STEEL WHICH MEETS ASTM A615 FOR GRADE 60 AND WELDED WIRE FABRIC CONFORMING TO ASTM A185.
* LIMIT MAXIMUM DEPTH TO TOP OF BOTTOM SLAB FOR WAFFLE WALL STRUCTURE TO 10'-0"; LIMIT SOLID WALL STRUCTURE TO 15'-0".
* PLACE LIFT HOLES OR PINS IN ACCORDANCE WITH OSHA STANDARD 1926.704.
* CUT OR FORM OPENINGS FOR PIPE TO PROVIDE REQUIRED SIZE AND LOCATION. ORIENT WAFFLE WALL STRUCTURES SO THAT PIPES ENTER THROUGH THE KNOCKOUT/WAFFLE PANELS ONLY. PIPES MAY ENTER THROUGH THE CORNERS OF SOLID WALL BOXES IF A MINIMUM OF 6" OF WALL IS PROVIDED ABOVE THE HOLE.
* ALL ELEMENTS PRECAST TO MEET ASTM C913.
* FRAME AND GRATE HEIGHT MAY BE ADJUSTED WITH CONCRETE BLOCKS.
* PROVIDE PRECAST STRUCTURES OVER 4'-0" IN DEPTH WITH STEPS 16" ON CENTER.
* WELDED WIRE FABRIC MAY BE SUBSTITUTED FOR REBAR AS LONG AS THE SAME AREA OF STEEL IS PROVIDED.
* SEAL JOINTS WITH A FLEXIBLE BUTYL RUBBER BASE CONFORMING TO FEDERAL SPECIFICATION SS-S-21A, AASHTO M-198, TYPE B - BUTYL RUBBER.
* LIMIT MAXIMUM STRUCTURE SIZE TO INSIDE CLEAR DIMENSIONS OF 5'-0" X 5'-0".
* THE OUTSIDE PIPE DIAMETER PLUS 2" OR THE OPENING REQUIRED FOR FRAME AND GRATE IS THE MINIMUM STRUCTURE SIZE WHICHEVER IS GREATER.

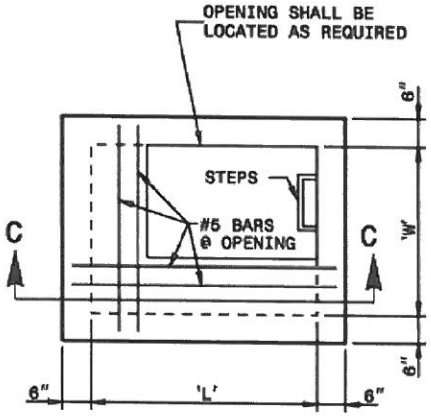

PLAN TOP SLAB

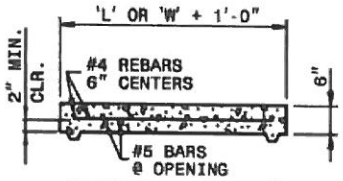

SECTION 'C-C'

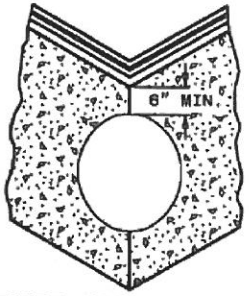

CORNER CUT DETAIL (SOLID WALL BOX)

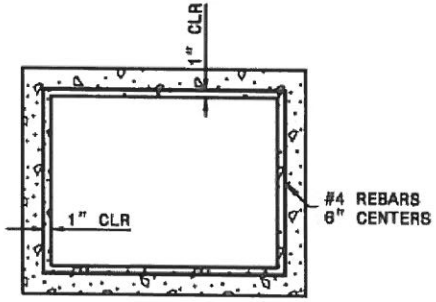

PRECAST RISER PLAN

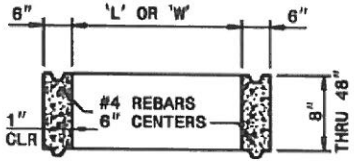

PRECAST RISER DETAIL

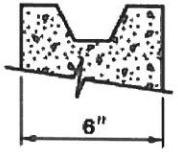

SECTION VIEW

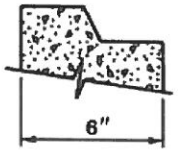

SECTION VIEW

OPTIONAL JOINT DETAILS

ADOPTED FROM NCDOT 840.45 2 OF 2

NON-TRAFFIC BEARING PRE-CAST DRAINAGE STRUCTURE (SOLID AND WAFFLE WALL)

DATE:	REVISIONS

STANDARD DETAIL

DATE: 10-03-16

SHEET 2 OF 2

STD. No. SD-3.05

CITY OF CLAREMONT, NORTH CAROLINA · 1893 ·

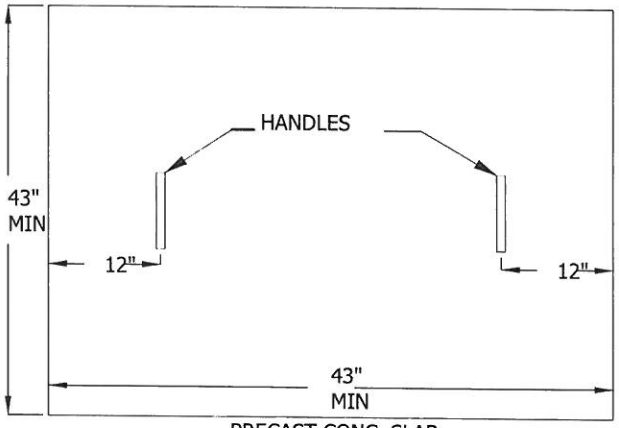

PRECAST CONC. SLAB

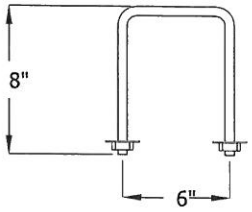

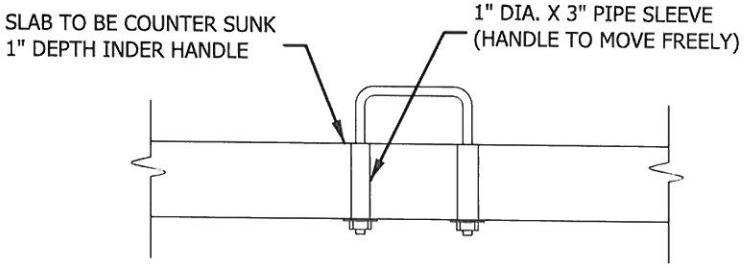

HANDLE DETAIL

NOTES:

1) USE CONCRETE BLOCK ONLY. NO CLAY BRICKS.
2) PRE-CAST UNITS MAY BE USED. SEE STANDARD DETAIL SD-3.05.
3) STEPS REQUIRED AT 16" O.C. WHERE DEPTH EXCEEDS 4'.
4) USE ONLY 4000 P.S.I. CONCRETE.
5) INSIDE DIMENSIONS FOR 24" PIPE AND LARGER, USE OUTSIDE PIPE DIAMETER PLUS 12".

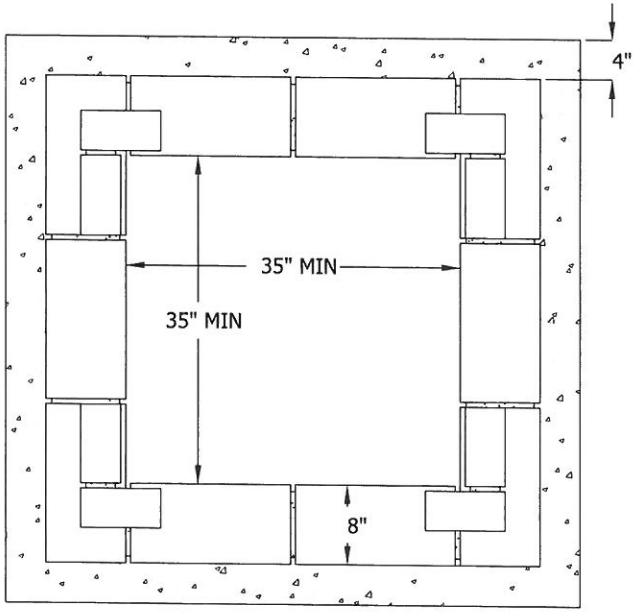

PLAN

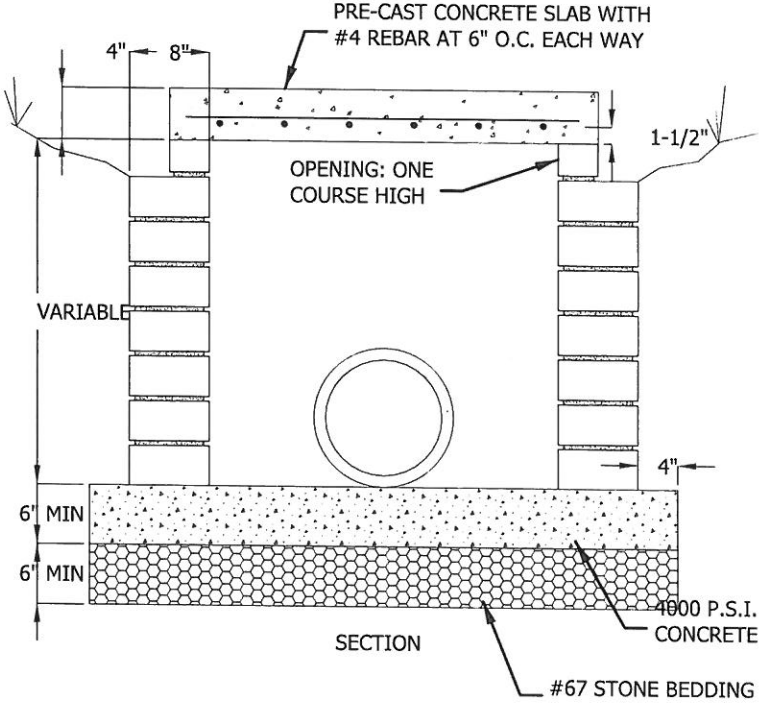

SECTION

NON-TRAFFIC BEARING DROP INLET

DATE:	REVISIONS

STANDARD DETAIL

DATE: 10-03-16

SHEET 1 OF 1

STD. No. SD-3.06

CITY OF CLAREMONT, NORTH CAROLINA · 1893 ·

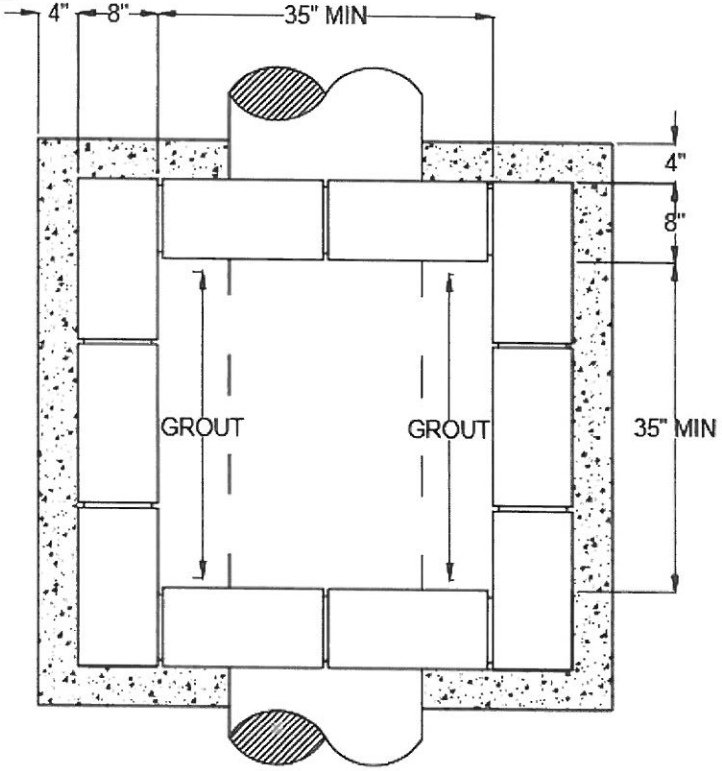

PLAN

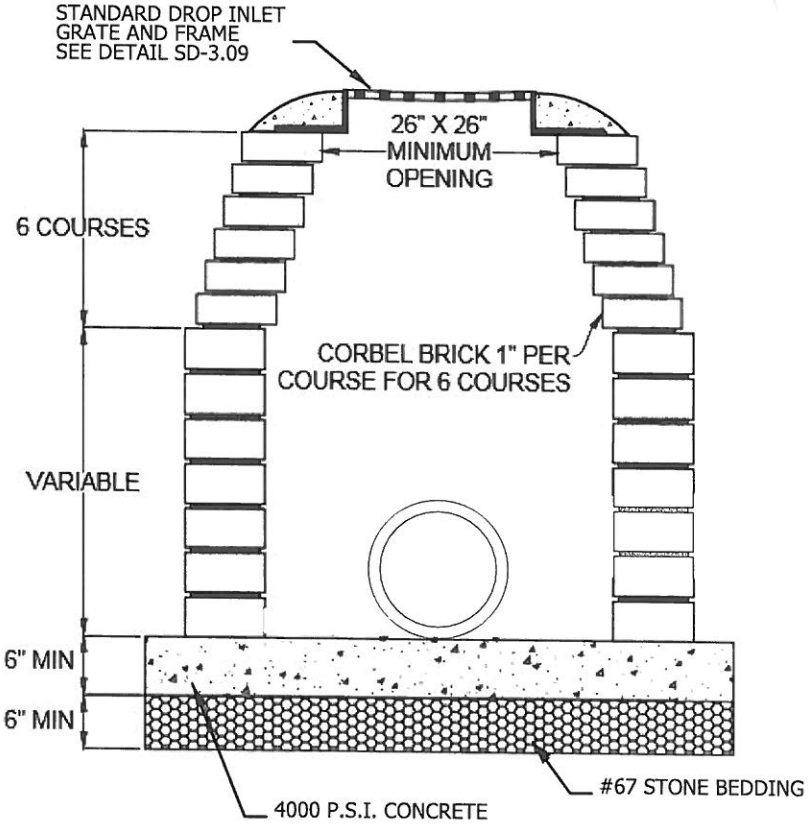

SECTION

NOTES:

1) USE CONCRETE BLOCK ONLY. NO CLAY BRICKS.

2) PRE-CAST UNITS MAY BE USED. SEE STANDARD DETAIL SD-3.05. PROVIDE FLAT TOP SLAB SIMILAR TO SD-3.02.

3) STEPS REQUIRED AT 16" O.C. WHERE DEPTHS EXCEEDS 3'-6" FEET.

4) USE ONLY 4000 P.S.I. CONCRETE.

5) INSIDE DIMENSIONS FOR 24" PIPE AND LARGER, USE OUTSIDE PIPE DIAMETER PLUS 12".

6) FOR TRAFFIC BEARING DROP INLET USE N.C.D.O.T STD No. 840.35, CONCRETE ALTERNATE ONLY.

NON-TRAFFIC BEARING DROP INLET WITH GRATE AND FRAME

DATE:	REVISIONS

STANDARD DETAIL

DATE: 10-03-16

SHEET 1 OF 1

STD. No. SD-3.07

CITY OF CLAREMONT, NORTH CAROLINA · 1893 ·

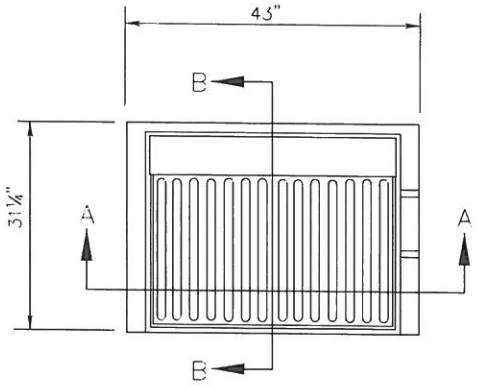

PLAN

FRAME, GRATE, & HOOD ASS'Y

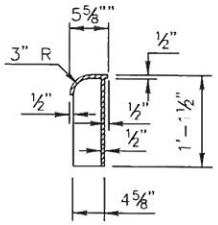

SECTION – RR

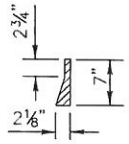

SECTION – LL

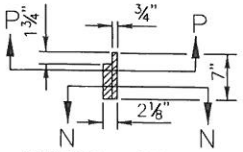

SECTION – MM

SECTION – PP

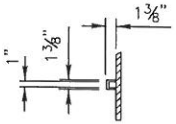

SECTION – NN

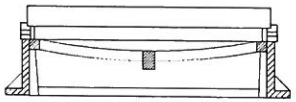

SECTION – AA

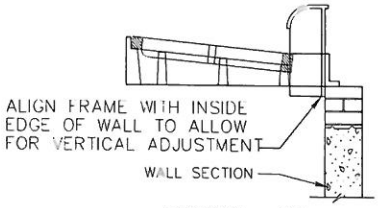

SECTION – BB

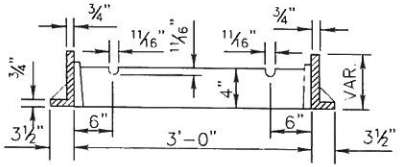

SECTION – KK

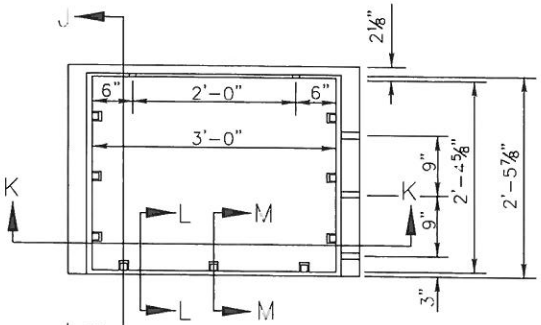

FRAME PLAN

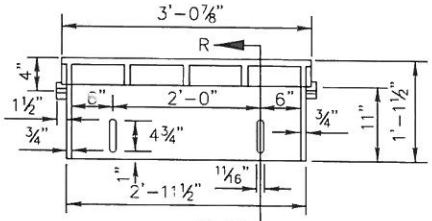

HOOD ELEVATION

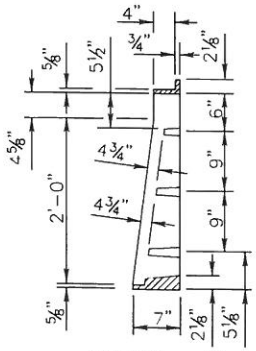

SECTION – JJ

NOTE: USE TYPE "E", "F" AND "G" GRATE UNLESS OTHERWISE NOTED.

ADOPTED FROM NCDOT 840.03 1 OF 2

STANDARD FRAME, GRATES AND HOOD

DATE:	REVISIONS

STANDARD DETAIL

DATE: 10-03-16

SHEET 1 OF 2

STD. No. SD-3.08

CITY OF CLAREMONT, NORTH CAROLINA · 1893 ·

DETAIL SHOWING TYPES OF GRATES
USE ACCORDING TO WATER FLOW.

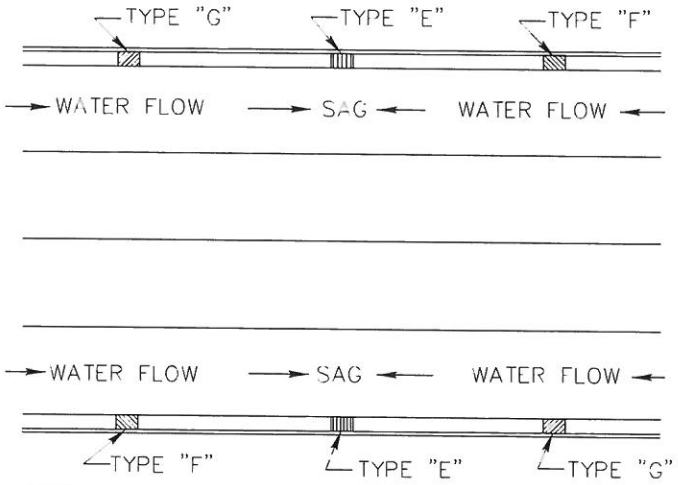

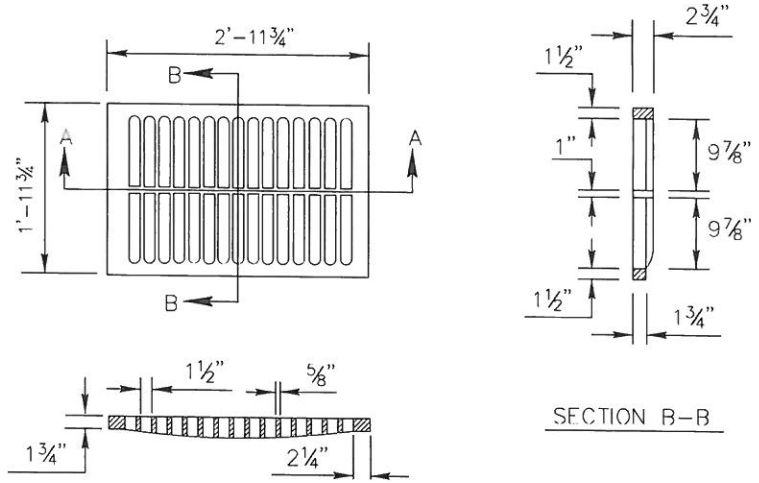

TYPE - E

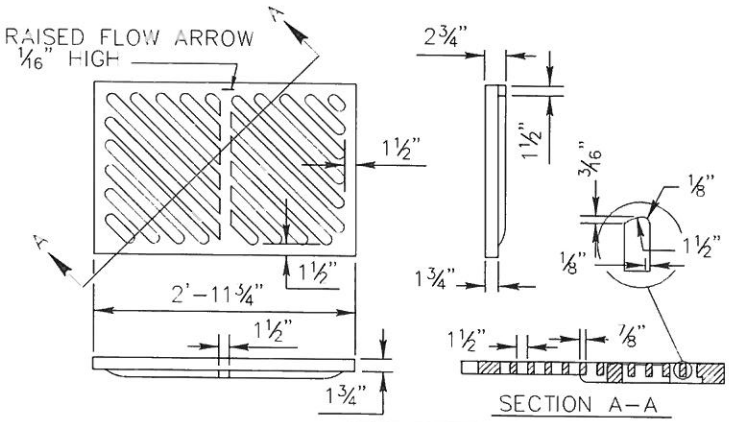

TYPE - F

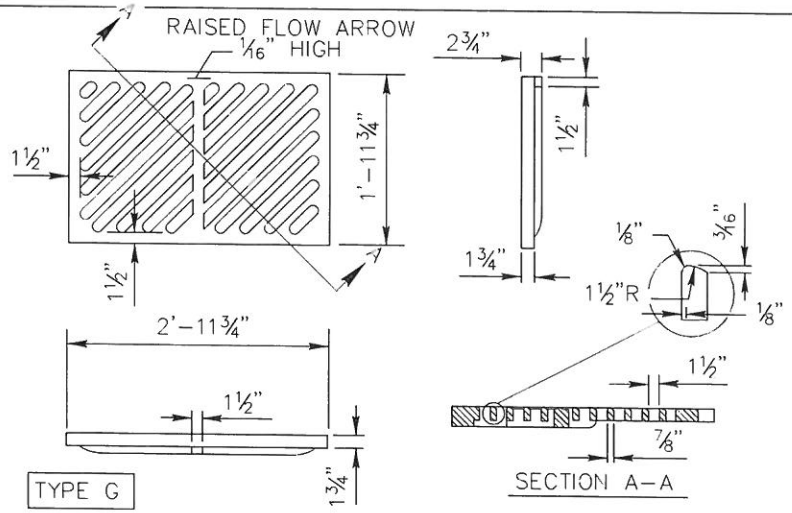

TYPE G

ADOPTED FROM NCDOT 840.03 2 OF 2

STANDARD FRAME, GRATES AND HOOD

DATE:	REVISIONS

STANDARD DETAIL

DATE: 10-03-16

SHEET 2 OF 2

STD. No. SD-3.08

CITY OF CLAREMONT, NORTH CAROLINA · 1893 ·

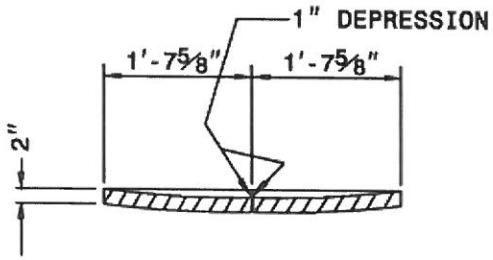

SECTION G-G

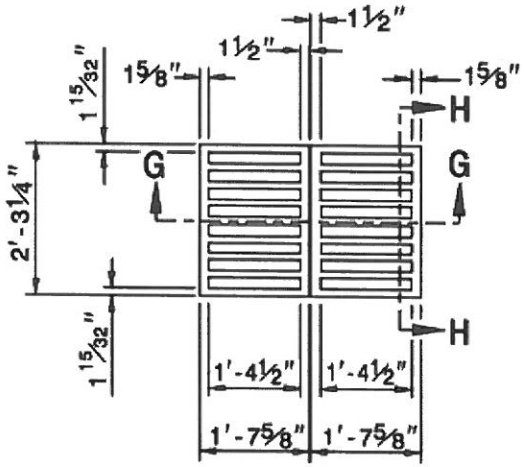

PLAN OF GRATING

CAST IRON

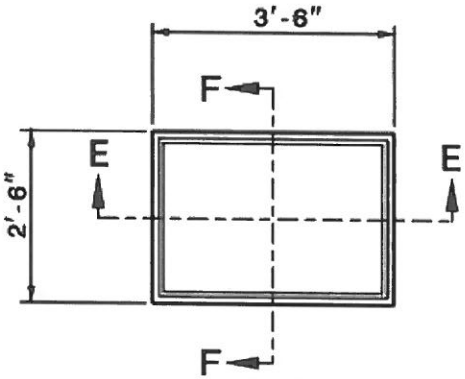

PLAN OF FRAME

CAST IRON

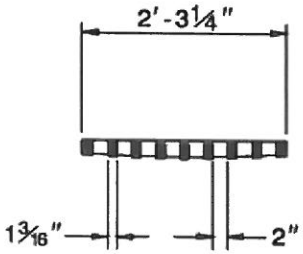

SECTION H-H

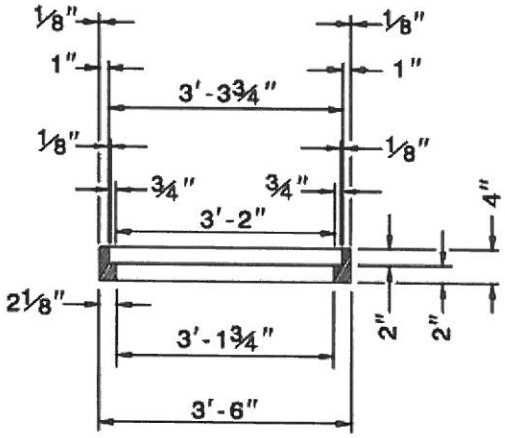

SECTION E-E

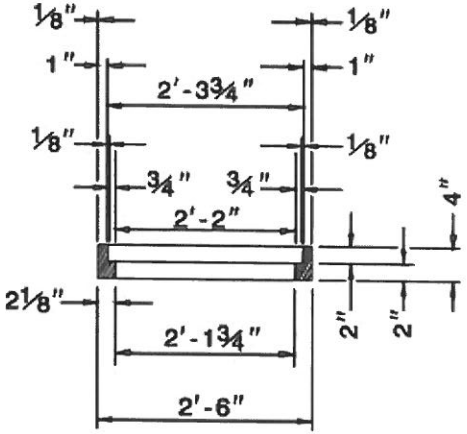

SECTION F-F

NOTE:
FOR TRAFFIC BEARING DROP INLET
USE N.C.D.O.T. STANDARD No. 840.37

ADOPTED FROM NCDOT 840.16

NON-TRAFFIC BEARING DROP INLET FRAME AND GRATE

DATE:	REVISIONS

STANDARD DETAIL

DATE: 10-03-16

SHEET 1 OF 1

STD. No. SD-3.09

CITY OF CLAREMONT, NORTH CAROLINA · 1893 ·

Point precipitation frequency estimates (inches)
NOAA Atlas 14 Volume 2 Version 3
Data type: Precipitation depth
Time series type: Partial duration
Project area: Ohio River Basin
Location name: Claremont, North Carolina, US*
Station Name: CATAWBA 3 NNW
Latitude: 35.7076°
Longitude: -81.1317°
Elevation: 965 ft*
* source: Google Maps

PRECIPITATION FREQUENCY ESTIMATES

by duration for ARI:	1	2	5	10	25	50	100	200	500	1000 years
5-min:	0.37	0.44	0.52	0.58	0.65	0.7	0.74	0.79	0.85	0.89
10-min:	0.59	0.7	0.83	0.92	1.03	1.11	1.18	1.25	1.34	1.4
15-min:	0.74	0.88	1.05	1.17	1.3	1.4	1.5	1.58	1.69	1.76
30-min:	1.02	1.22	1.49	1.69	1.93	2.11	2.29	2.46	2.68	2.85
60-min:	1.27	1.53	1.91	2.2	2.57	2.87	3.16	3.45	3.85	4.16
2-hr:	1.48	1.79	2.25	2.61	3.1	3.49	3.88	4.29	4.86	5.3
3-hr:	1.58	1.92	2.42	2.81	3.36	3.81	4.26	4.75	5.42	5.97
6-hr:	1.95	2.35	2.96	3.44	4.11	4.66	5.22	5.82	6.65	7.32
12-hr:	2.38	2.88	3.61	4.2	5.01	5.67	6.35	7.06	8.06	8.85
24-hr:	2.91	3.53	4.48	5.22	6.24	7.05	7.89	8.76	9.95	10.89
2-day:	3.46	4.18	5.24	6.07	7.19	8.08	8.98	9.91	11.17	12.17
3-day:	3.68	4.43	5.53	6.38	7.53	8.44	9.37	10.31	11.61	12.63
4-day:	3.9	4.68	5.81	6.68	7.87	8.8	9.75	10.72	12.04	13.08
7-day:	4.49	5.37	6.55	7.45	8.65	9.59	10.54	11.49	12.78	13.78
10-day:	5.14	6.13	7.37	8.31	9.54	10.49	11.44	12.39	13.66	14.64
20-day:	6.88	8.14	9.62	10.75	12.26	13.43	14.59	15.76	17.32	18.52
30-day:	8.51	10.01	11.54	12.67	14.11	15.19	16.23	17.25	18.58	19.57
45-day:	10.73	12.55	14.19	15.41	16.95	18.09	19.18	20.23	21.58	22.57
60-day:	12.76	14.86	16.68	18.04	19.76	21.04	22.25	23.43	24.92	26.04

Date/time (GMT): Tue Aug 2 17:34:10 2016
pyRunTime: 0.064553976059

RAINFALL INTENSITY

DATE:	REVISIONS

STANDARD DETAIL

DATE: 10-03-16
SHEET 1 OF 1
STD. No. SD-3.10

CITY OF CLAREMONT, NORTH CAROLINA · 1893 ·

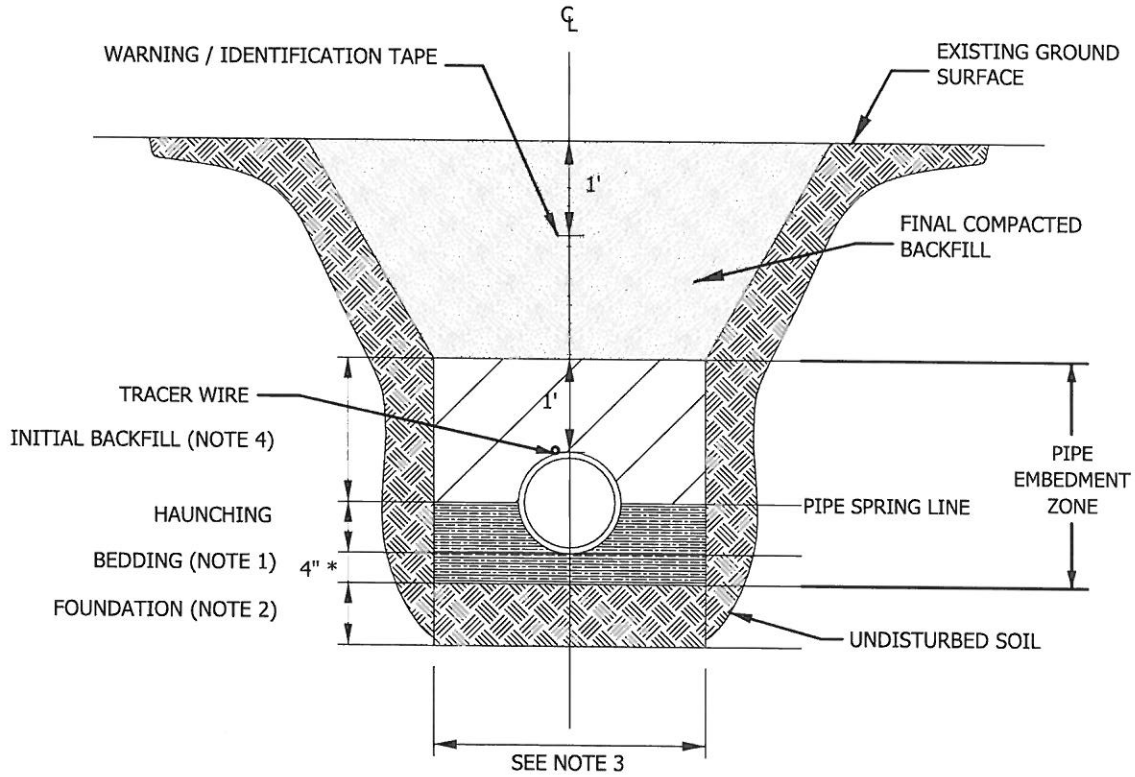

* 6" REQUIRED FOR PIPES GREATER THAN 30" IN DIAMETER

NOTES:

1) STONE BEDDING IS NOT REQUIRED IN SUITABLE CLASS I, CLASS II, CLASS III, AND STABLE CLASS IV SOILS. PROVIDE STONE BEDDING IN UNSTABLE CLASS IV OR CLASS V SOILS, RUNNING WATER OR OTHER UNSTABLE SOIL CONDITIONS IN BEDDING AND HAUNCH ZONE. BACKFLL WITH CLASS I, II, OR III MATERIAL IN INITIAL BACKFILL.
2) CLASS I FOUNDATION STONE SHALL BE REQUIRED WHEN SOIL CONDITIONS ARE UNSTABLE. UNDERCUT DEPTH AS DIRECTED BY CITY.
3) TRENCH WIDTH IS MINIMUM OF THE PIPE O.D. PLUS 18" AND MAXIMUM OF PIPE O.D. PLUS 24".
4) INITIAL BACKFILL SHALL BE PLACED AND COMPACTED IN 6" LIFTS. INITIAL BACKFILL SHALL CONTAIN NO MATERIAL OVER 1 1/2" IN DIAMETER, FROZEN LUMPS, OR DEBRIS.
5) BACKFILL SHALL BE COMPACTED IN ACCORDANCE WITH SPECIFICATIONS.

REINFORCED CONCRETE RIGID PIPE TRENCH

DATE:	REVISIONS

STANDARD DETAIL

DATE: 10-03-16

SHEET 1 OF 1

STD. No. SD-3.11

CITY OF CLAREMONT, NORTH CAROLINA · 1893 ·

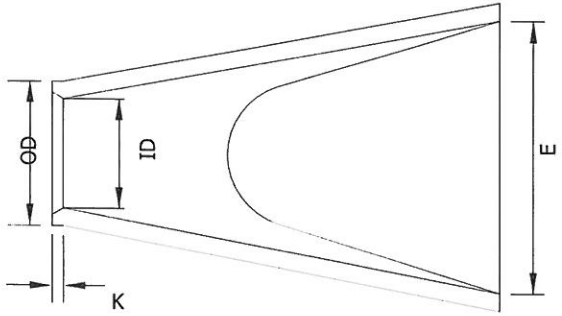

PLAN

TABLE OF DIMENSIONS												
ID	T	0D	A	B	C	E	H	J	K	M	L	WT.
15"	2-1/4"	19-1/2"	7"	27-1/4"	47-1/2"	30"	17"	16-1/2"	2"	2"	74-3/4"	1038
18"	2-1/2"	23"	9"	27"	47-3/4"	36"	20-1/4"	19-1/2"	2"	2"	74-3/4"	1426
24"	3"	30"	9"	43"	37"	47-3/4"	26-3/4"	26-1/4"	2-13/16"	2-3/4"	80"	2137
30"	3-1/2"	37"	12"	54-1/2"	22-1/2"	60"	33-1/2"	32-1/2"	3"	2-15/16"	77"	2990
36"	4"	44"	16"	60"	37-1/2"	71"	39-3/4"	39"	3-3/4"	3-3/4"	97-1/2"	3960
42"	4-1/2"	51"	22-1/4"	61-3/8"	37"	77-1/4"	46-1/8"	45-1/8"	4-1/4"	4-1/4"	98-3/8"	5160
48"	5"	58"	25-1/4"	70-1/4"	29"	83-1/2"	52-1/2"	51-3/4"	4-1/4"	4-1/4"	99-1/4"	6480
54"	5-1/2"	65-1/4"	26"	65"	39-1/2"	89-3/4"	58-1/4"	57-1/2"	4-1/4"	4-1/4"	104-1/2"	9370
60"	6"	72-1/4"	28-1/2"	57-1/2"	46"	96"	64-3/4"	64"	4-3/4"	4-3/4"	103-1/2"	11650

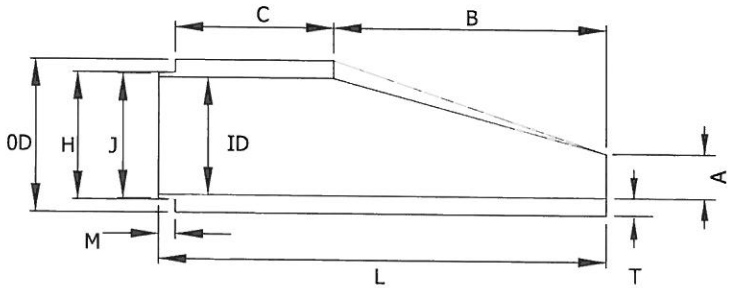

SECTION

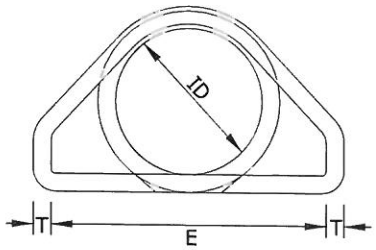

END VIEW

NOTES:

1) REFER TO STANDARD SPECIFICATIONS FOR MATERIALS AND INSTALLATION.

2) CONCRETE SHALL BE MINIMUM 3500 P.S.I.

REINFORCED PRECAST CONCRETE FLARED END SECTION

DATE:	REVISIONS

STANDARD DETAIL

DATE: 10-03-16

SHEET 1 OF 1

STD. No. SD-3.12

CITY OF CLAREMONT, NORTH CAROLINA · 1893 ·

DISCHARGE TO NO
WELL DEFINED CHANNEL

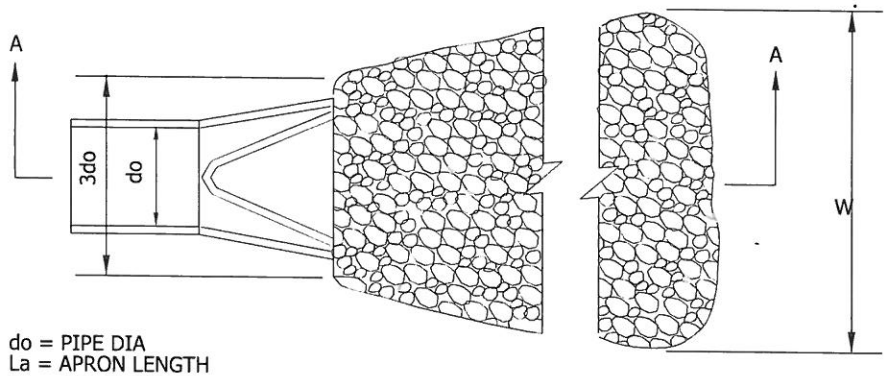

do = PIPE DIA
La = APRON LENGTH
W = APRON WIDTH
3 X PIPE Ø MIN
d = APRON DEPTH

PLAN

DISCHARGE TO
WELL DEFINED CHANNEL

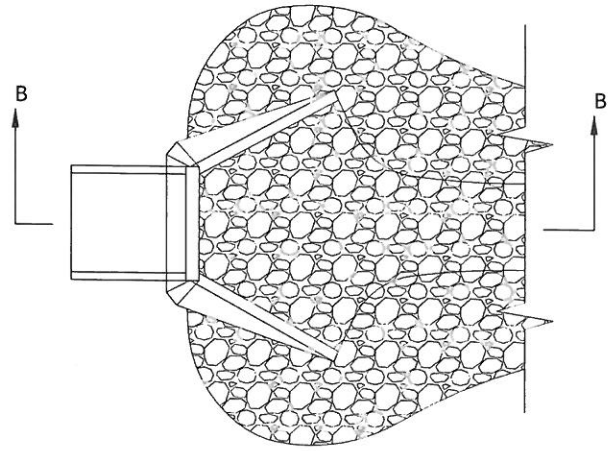

PLAN

1) La IS THE LENGTH OF THE RIPRAP APRON.
2) d = 1.5 TIMES THE MAXIMUM STONE DIAMETER BUT NOT LESS THAN 6"
3) A FILTER BLANKET OR FILTER FABRIC SHOULD BE INSTALLED BETWEEN THE RIPRAP AND SOIL FOUNDATION.
4) IN A WELL-DEFINED CHANNEL, EXTEND THE APRON UP THE CHANNEL BANKS TO AN ELEVATION OF 6" ABOVE THE MAXIMUN TAILWATER DEPTH OR TO THE TOP OF THE BANK, WHICHEVER IS LESS.

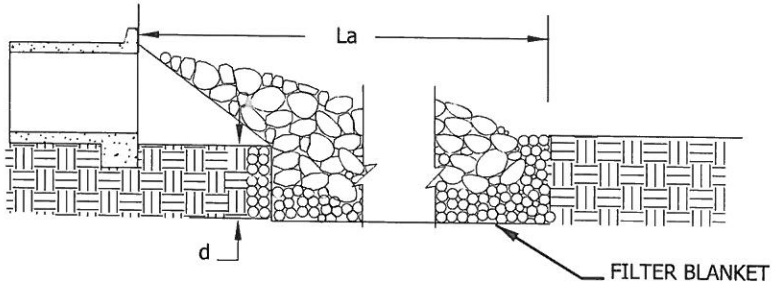

SECTION B-B

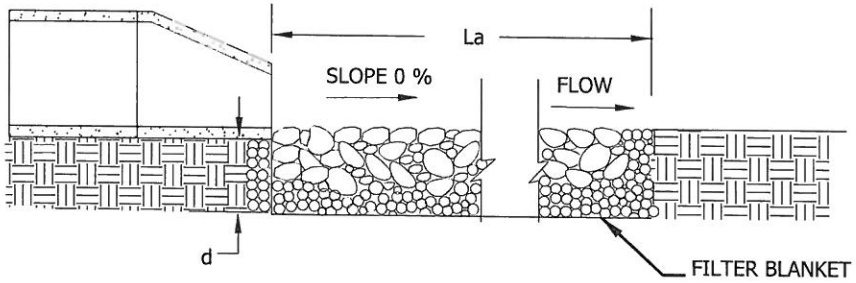

SECTION A-A

FLARED END SECTION OUTLET TREATMENT

DATE:	REVISIONS

STANDARD DETAIL

DATE: 10-03-16
SHEET 1 OF 1
STD. No. SD-3.13

CITY OF CLAREMONT, NORTH CAROLINA · 1893 ·

NOTES:

1) PRECAST MANHOLE SHALL CONFORM TO ASTM C478 WITH AASHTO M198 BUTYL SEALS BETWEEN JOINTS AND 6" MIN. EXTERNAL SEAL ON THE OUTSIDE OF ALL JOINTS.

2) MANHOLE RING SHALL BE FLUSH WITH PAVED SURFACES AND LAWNS. SET 2 TO 3 FEET ABOVE GRADE IN UNIMPROVED AREAS.

3) MANHOLE RIMS SHALL BE SET 2 FEET ABOVE 100 YEAR FLOOD ELEVATION, OR USE WATERTIGHT LIDS.

4) USE 5' DIA. MANHOLE WHERE DEPTH IS GREATER THAN 15 FEET.

5) HOLES FOR CONNECTION OF PIPE TO MANHOLE SHALL BE PRECAST OR CORED. DIAMETER OF HOLE SHALL NOT EXCEED OUTSIDE DIAMETER OR PIPE BY MORE THAN 3 INCHES.

6) CONNECTION OF PIPE TO MANHOLE SHALL BE MADE WATERTIGHT USING RESILIENT CONNECTORS CONFORMING TO ASTM C 923 OR NEOPRENE BOOTS EMBEDDED IN PRECAST BASE WITH STAINLESS STEEL COMPRESSED BANDS.

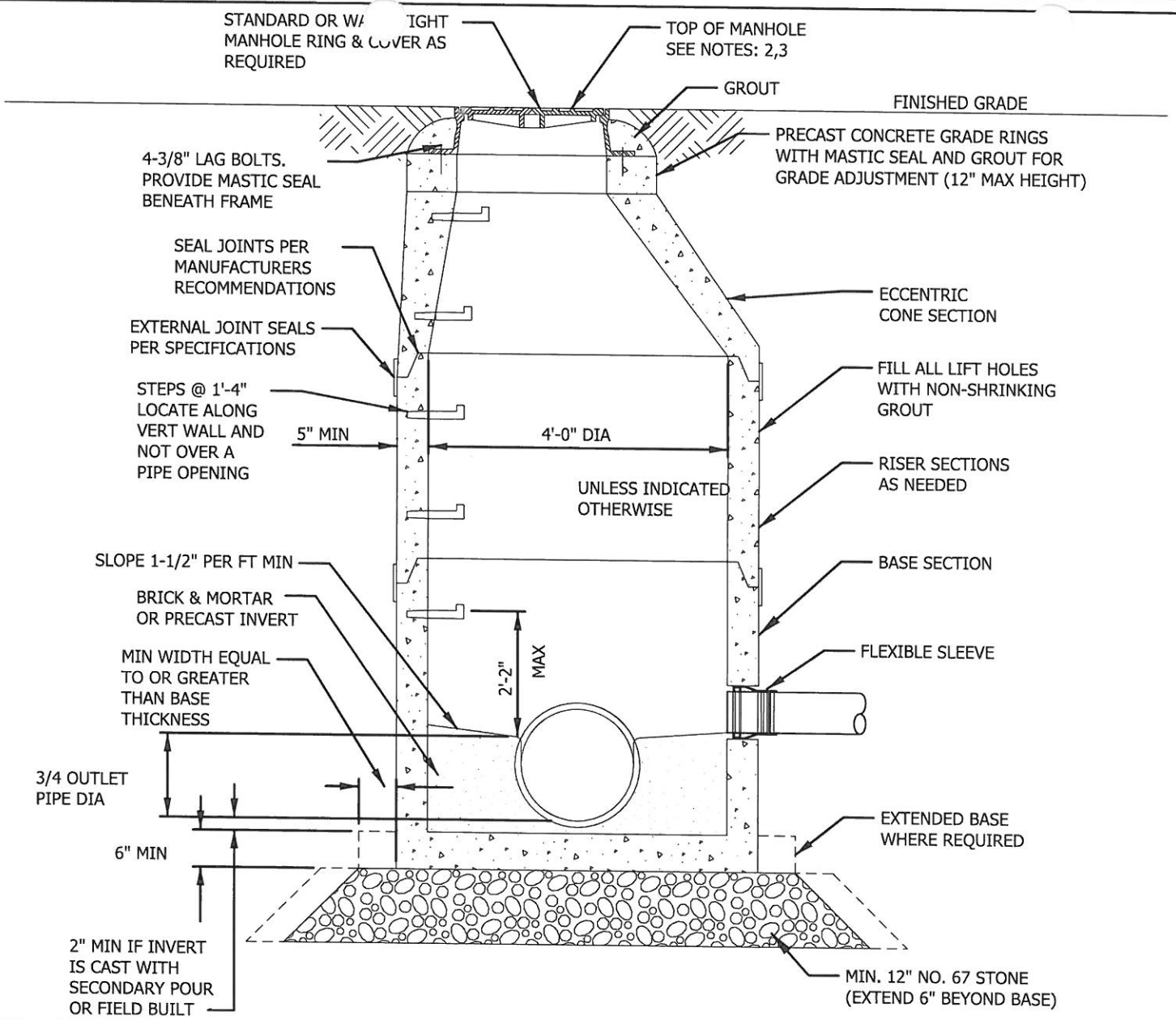

STANDARD PRECAST CONCRETE MANHOLE

DATE:	REVISIONS

STANDARD DETAIL

DATE: 10-03-16

SHEET 1 OF 1

STD. No. SD-3.14

CITY OF CLAREMONT, NORTH CAROLINA · 1893 ·

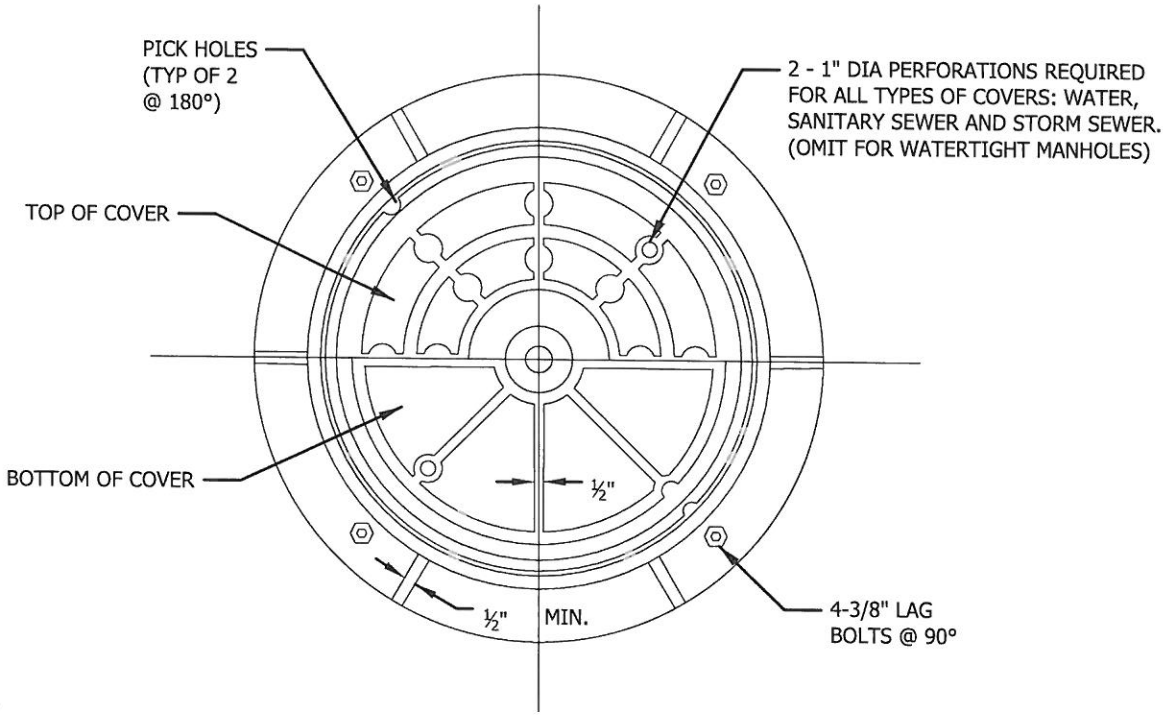

COVER LETTERING DETAIL

NOTES:

1) RING AND COVER SHALL HAVE TOTAL COMBINED WEIGHT OF 310 LB MIN. AND BE SUITABLE FOR H-20 LOADING.

2) ALL BOLTS ARE TO BE TYPE 316 STAINLESS STEEL.

3) USE COVER LETTERING AS APPROPRIATE FOR APPLICATION.

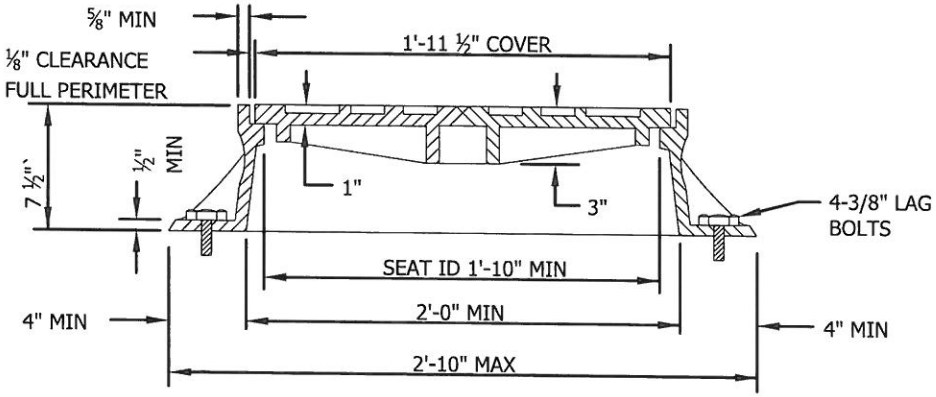

STANDARD MANHOLE RING AND COVER

DATE:	REVISIONS

STANDARD DETAIL

DATE: 10-03-16

SHEET 1 OF 1

STD. No. SD-3.15

CITY OF CLAREMONT, NORTH CAROLINA · 1893 ·