Standard Detail Index

SECTION 2 ♦ WATER DISTRIBUTION SYSTEM

Detail #	Detail Description
W-2.01	Typical 3/4" and 1" Water Service
W-2.02	Standard 1-1/2" and 2" Meter and Vault
W-2.03	Typical 3" and Larger Service Installation
W-2.04	Fire Defense Line with Meter and By Pass
W-2.05	Standard 1-1/2" — 2" Backflow Assembly
W-2.06	Standard 3" and Larger Backflow Assembly
W-2.07	Valve Box Installation
W-2.08	Fire Hydrant Assembly
W-2.09	Tapping Sleeve and Valve
W-2.10	Standard 2" Blow-Off Assembly
W-2.11	Standard Temporary Capping
W-2.12	Standard Valve Rodding
W-2.13	Thrust Block for Horizontal Pipe Bends
W-2.14	Water Line Bedding
W-2.15	Valve Sign
W-2.16	Yard Hydrant
W-2.17	Installation of Pipe Line at Culvert Detail
W-2.18	1" RPZ or Double Check Backflow Assembly
W-2.19	Backflow Prevention Device for Filling New Mains

♦ ♦ ♦ ♦ ♦

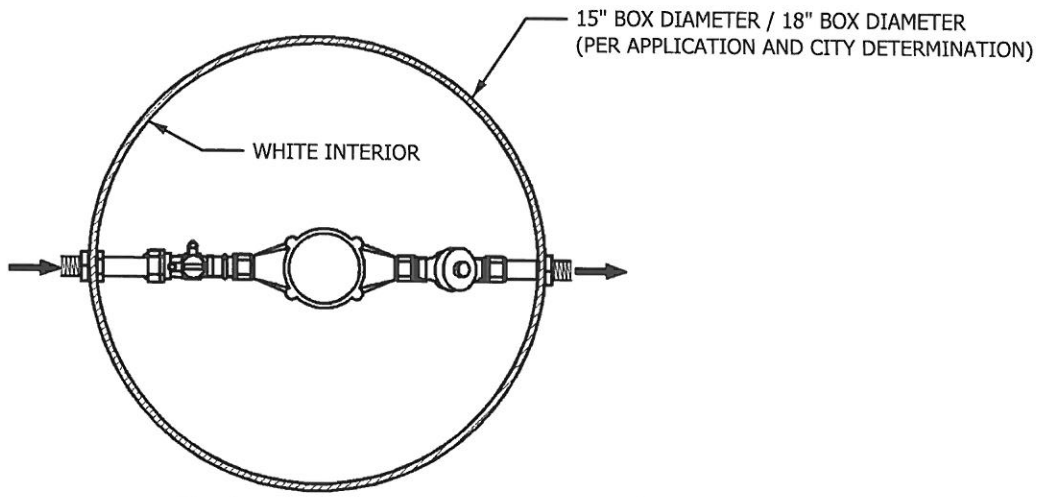

Typical Installation

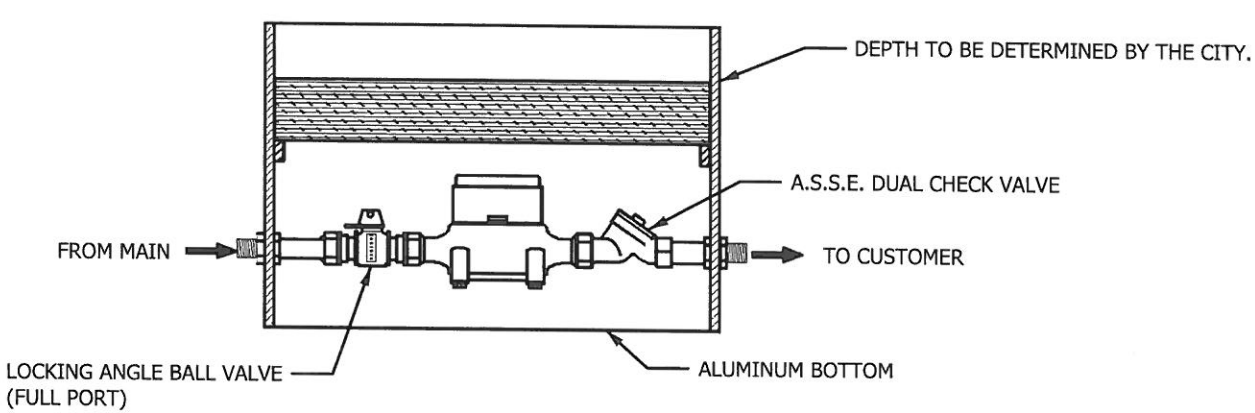

NOTES:

1) MUELLER EZ-SETTER METER BOX IS THE CITY STANDARD.
2) COMPONENTS IN CONTACT WITH POTABLE WATER SHALL COMPLY WITH THE LATEST REQUIREMENTS OF THE FEDERAL SAFE DRINKING WATER ACT.
3) COMPONENTS SHALL MEET NSF 61 CERTIFICATION REQUIREMENTS.
4) VALVES AND COUPLINGS SHALL BE MANUFACTURED AND TESTED IN ACCORDANCE WITH ANSI/AWWA C800.
5) METER SET TO BE ANCHORED TO METER BOX WALL. RIGID 0.300" MINIMUM PVC WALL.
6) MALE I.P. INLET AND OUTLET CONNECTIONS.

TYPICAL 3/4" AND 1" WATER SERVICE

DATE:	REVISIONS

STANDARD DETAIL

DATE: 10-03-16

SHEET 1 OF 1

STD. No. W-2.01

CITY OF CLAREMONT, NORTH CAROLINA · 1893 ·

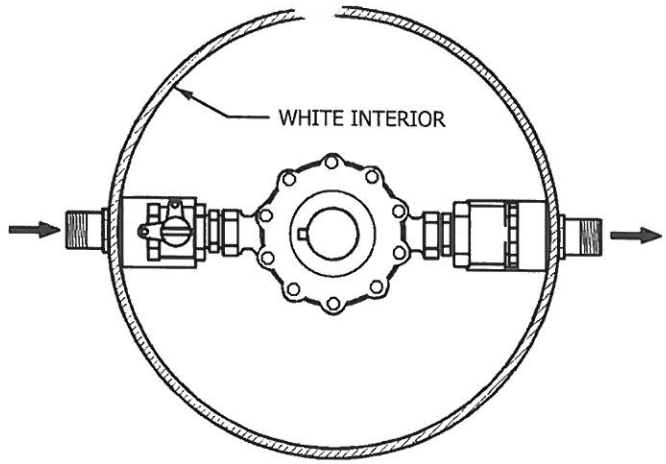

Typical Installation

NOTES:

1) MUELLER EZ-SETTER METER VAULT IS THE CITY STANDARD
2) COMPONENTS IN CONTACT WITH POTABLE WATER SHALL COMPLY WITH THE LATEST REQUIREMENTS OF THE FEDERAL SAFE DRINKING WATER ACT.
3) COMPONENTS SHALL MEET NSF 61 CERTIFICATION REQUIREMENTS.
4) VALVES AND COUPLINGS SHALL BE MANUFACTURED AND TESTED IN ACCORDANCE WITH ANSI/AWWA C800.
5) MALE I.P. INLET AND OUTLET CONNECTIONS.

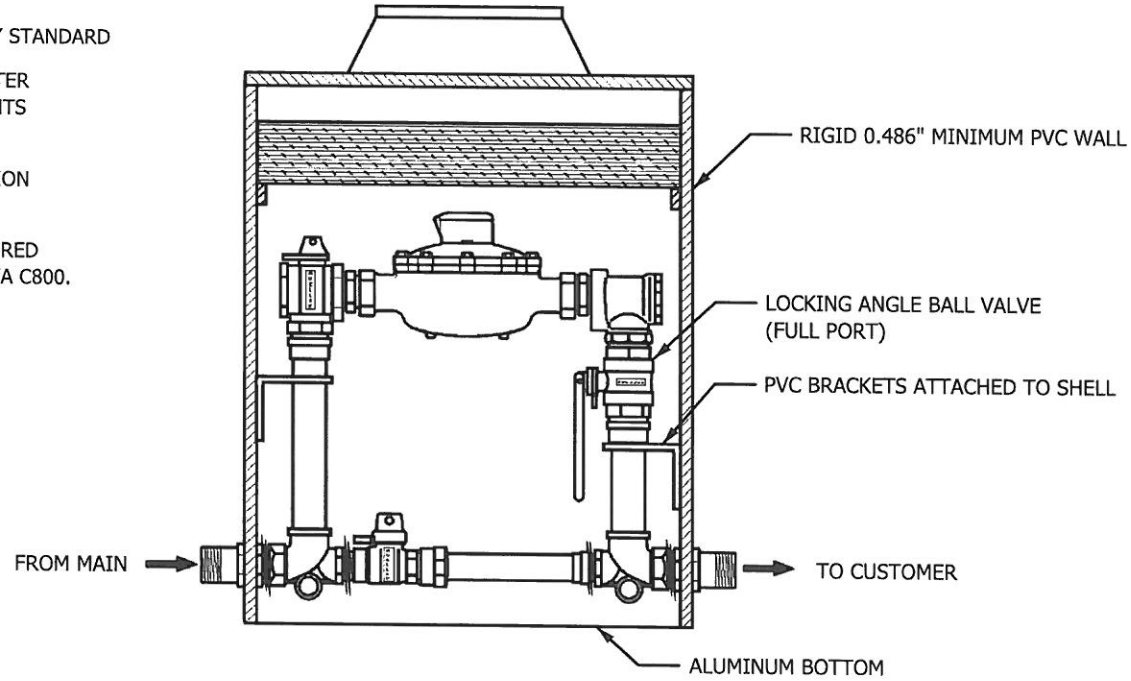

STANDARD 1 1/2" & 2" METER AND VAULT

DATE:	REVISIONS

STANDARD DETAIL

DATE: 10-03-16

SHEET 1 OF 1

STD. No. W-2.02

CITY OF CLAREMONT, NORTH CAROLINA · 1893 ·

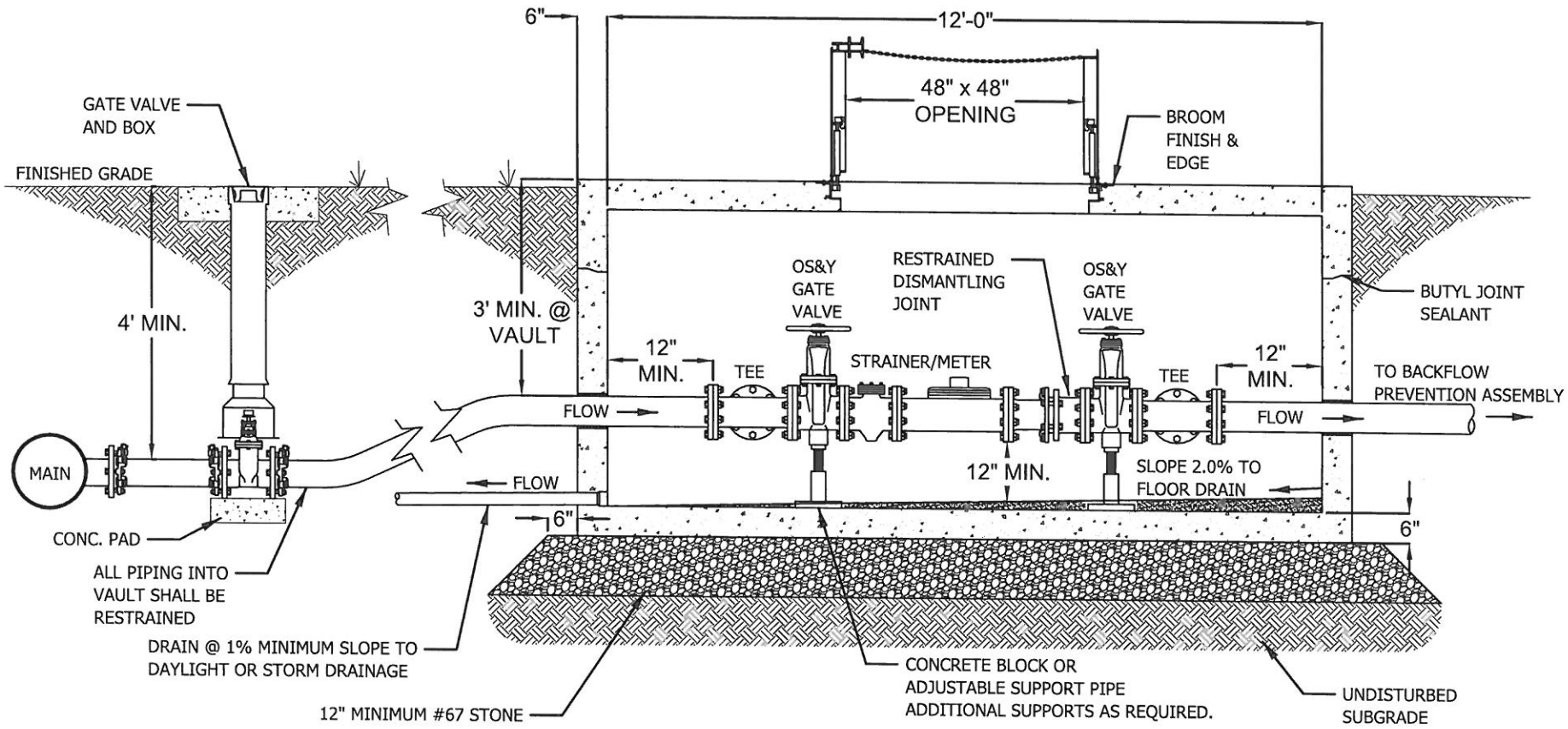

SECTION

TYPICAL 3" AND LARGER SERVICE INSTALLATION

DATE:	REVISIONS

STANDARD DETAIL

DATE: 10-03-16

SHEET 1 OF 2

STD. No. W-2.03

CITY OF CLAREMONT, NORTH CAROLINA · 1893 ·

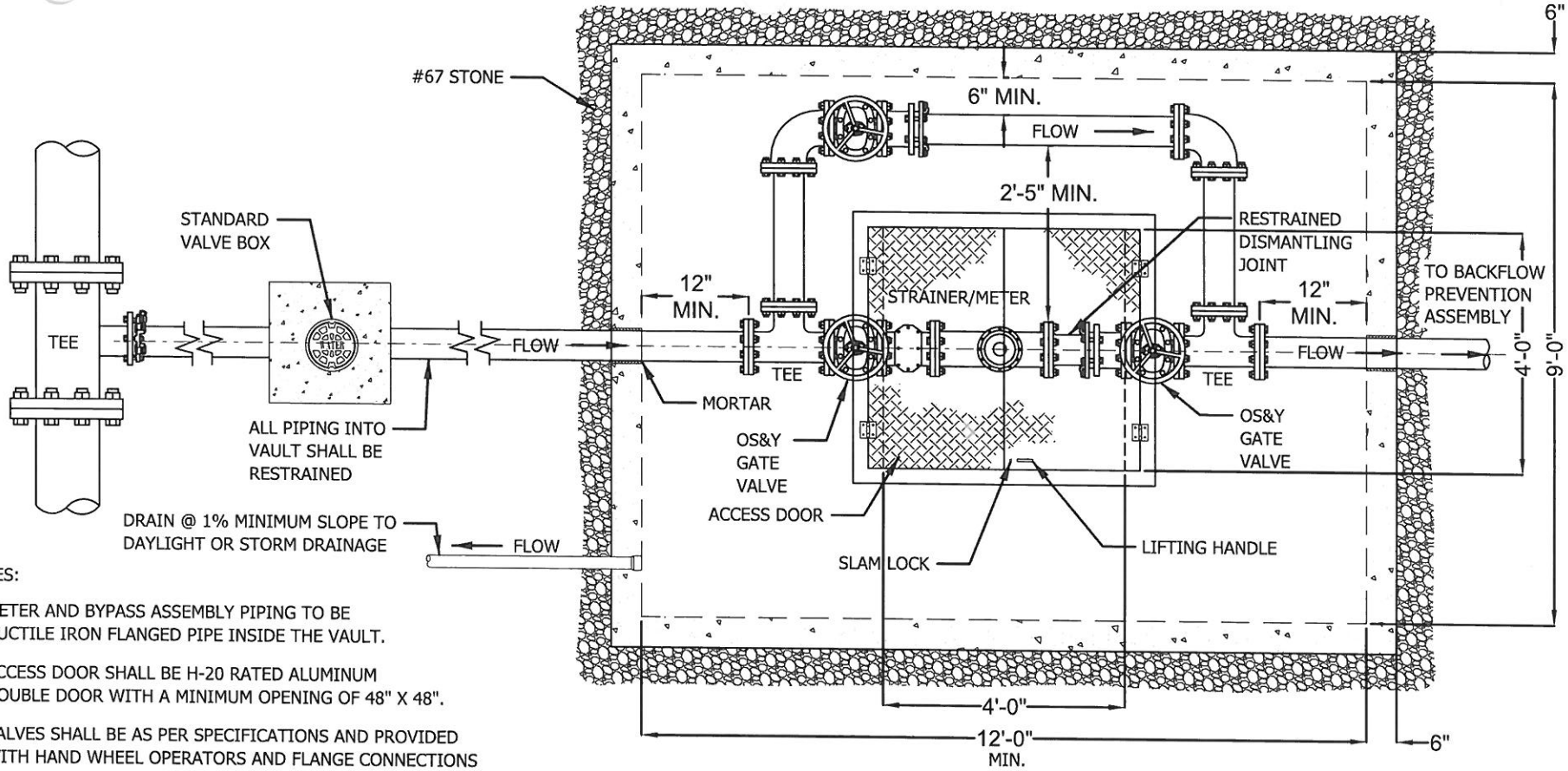

PLAN

NOTES:

1) METER AND BYPASS ASSEMBLY PIPING TO BE DUCTILE IRON FLANGED PIPE INSIDE THE VAULT.

2) ACCESS DOOR SHALL BE H-20 RATED ALUMINUM DOUBLE DOOR WITH A MINIMUM OPENING OF 48" X 48".

3) VALVES SHALL BE AS PER SPECIFICATIONS AND PROVIDED WITH HAND WHEEL OPERATORS AND FLANGE CONNECTIONS INSIDE VAULT. SUPPORTS SHALL BE SOLID BLOCK, OR ADJUSTABLE STEEL PIPE SUPPORTS.

4) TO ENSURE POSITIVE DRAINAGE, THE VAULT SHALL BE TIED INTO THE STORM DRAINAGE SYSTEM, IF POSITIVE DRAINAGE IS UNOBTAINABLE, A SUMP PUMP SHALL BE LOCATED AND OPERATED IN THE VAULT.

5) DOUBLE DOORS SHALL BE LOCKABLE WITH CITY SUPPLIED PADLOCK.

6) ALL APPLICATIONS REQUIRE AN ABOVE GROUND BACKFLOW PREVENTER.

7) VAULT TO BE DESIGNED BY A PROFESSIONAL ENGINEER LICENSED BY THE STATE OF N.C.

TYPICAL 3" AND LARGER SERVICE INSTALLATION

DATE:	REVISIONS

STANDARD DETAIL

DATE: 10-03-16

SHEET 2 OF 2

STD. No. W-2.03

CITY OF CLAREMONT, NORTH CAROLINA · 1893 ·

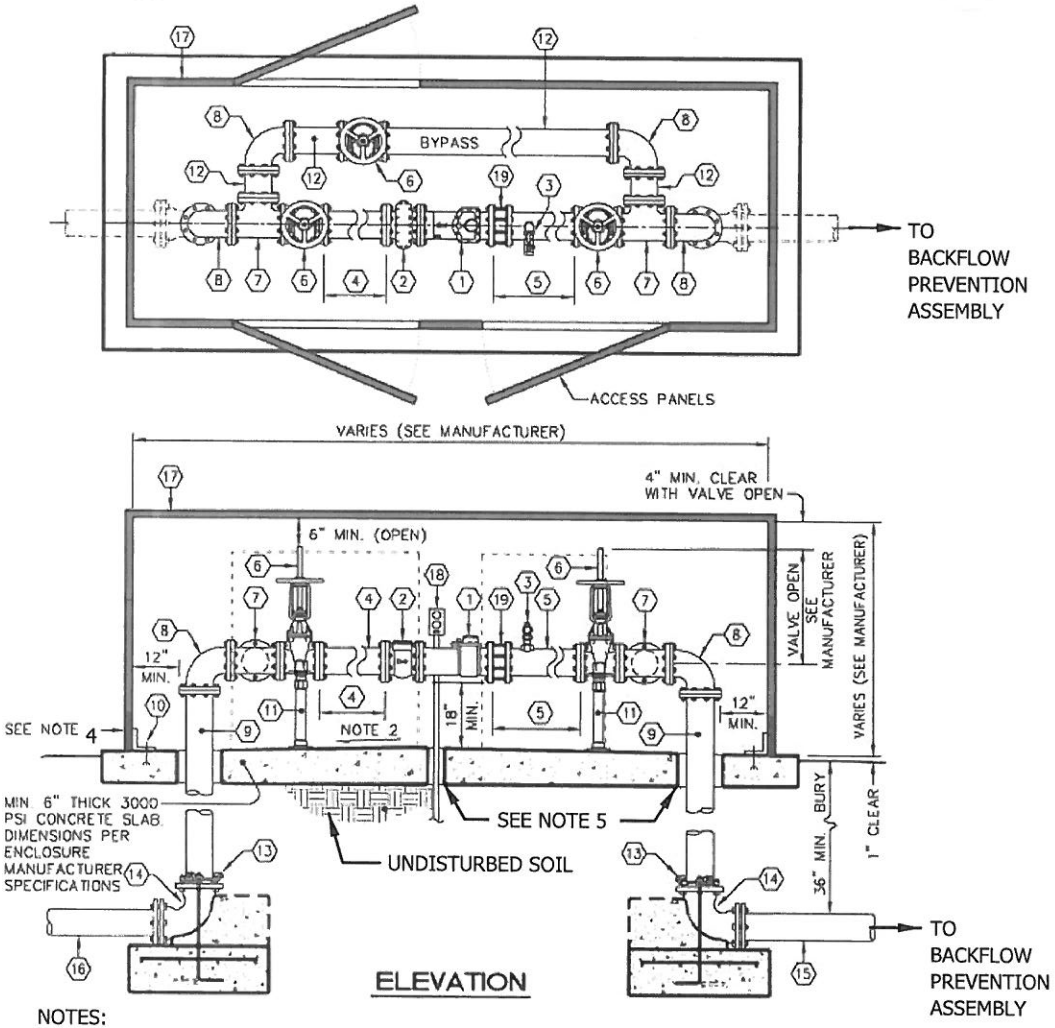

#	PART
1	METER
2	STRAINER
3	2" TEST PORT INSTALLED ON #5
4	DIP CLASS 350 NIPPLE (FLANGED) LENGTH = 5 TIMES THE PIPE DIAMETER
5	DIP CLASS 350 NIPPLE (FLANGED) LENGTH = 3 TIMES THE PIPE DIAMETER
6	OS&Y GATE VALVE
7	DIP CLASS 350 TEE (FLANGED)
8	DIP CLASS 350 90° BEND (FLANGED)
9	DIP CLASS 350 (FLANGED x PE)
10	STAINLESS STEEL EXPANSION ANCHOR BOLTS PER BOX MANUFACTURER RECOMMENDED SIZE & SPACING
11	ADJUSTABLE PIPE SUPPORTS HOT DIP GALVANIZED
12	DIP CLASS 350 NIPPLE (FLANGED) LENGHT = VARIES
13	WEDGE ACTION RESTRAINER GLAND JOINT RESTRAINT
14	90° DIP MJ x MJ ELBOW
15	DIP PIPE (OUTLET)
16	DIP PIPE (INLET)
17	INSULATED ENCLOSURE WITH LOCKING ACCESS DOORS
18	PROVIDE 120V RECEPTACLE ON GFCI NEAR PIPE RISER, SET MINIMUM 12" ABOVE DISCHARGE POINT OF RPZ. (AS APPLICABLE)
19	FLANGED COUPLING ADAPTOR

NOTES:

1) SLOPE FLOOR TO DRAIN TO PORTS AT BOTH ENDS. ENSURE POSITIVE SURFACE GRADE AWAY FROM ENCLOSURE.
2) 12" CLEARANCE AROUND ALL CONNECTIONS INSIDE VAULT FROM FLOOR AND WALLS. 18" CLEARING BETWEEN METER AND BYPASS PIPING.
3) VAULT SIZE TO BE APPROVED BY THE CITY.
4) PROVIDE DRAIN PORT FOR POSITIVE DRAINAGE OUT OF ENCLOSURE. (MINIMUM TWICE THE SIZE OF WATER MAIN PIPE.)
5) PROVIDE MINIMUM 3" ANNULAR CLEARANCE AROUND ALL D.I.P. RISERS AND 1" AROUND ELECTRICAL CONDUIT.

FIRE DEFENSE LINE WITH METER AND BY PASS

DATE:	REVISIONS

STANDARD DETAIL

DATE: 10-03-16

SHEET 1 OF 1

STD. No. W-2.04

CITY OF CLAREMONT, NORTH CAROLINA · 1893 ·

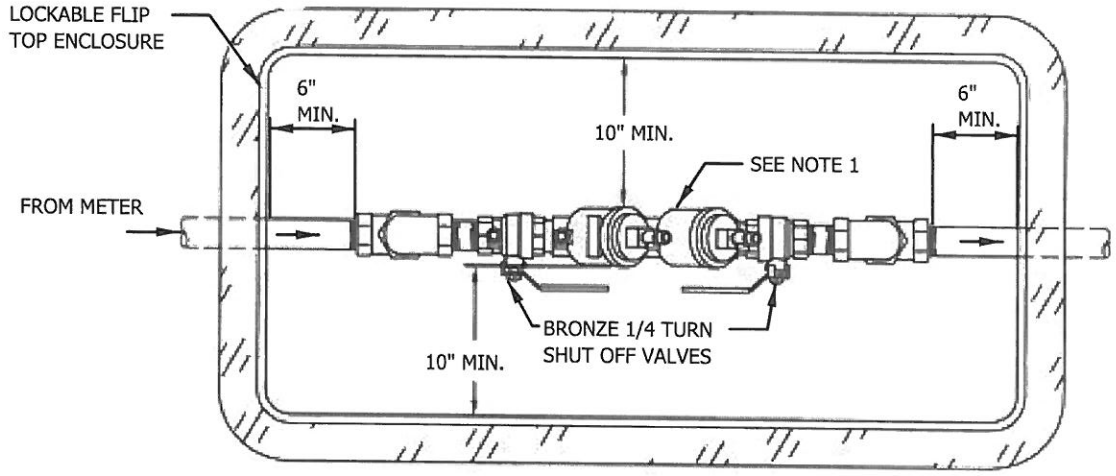

PLAN

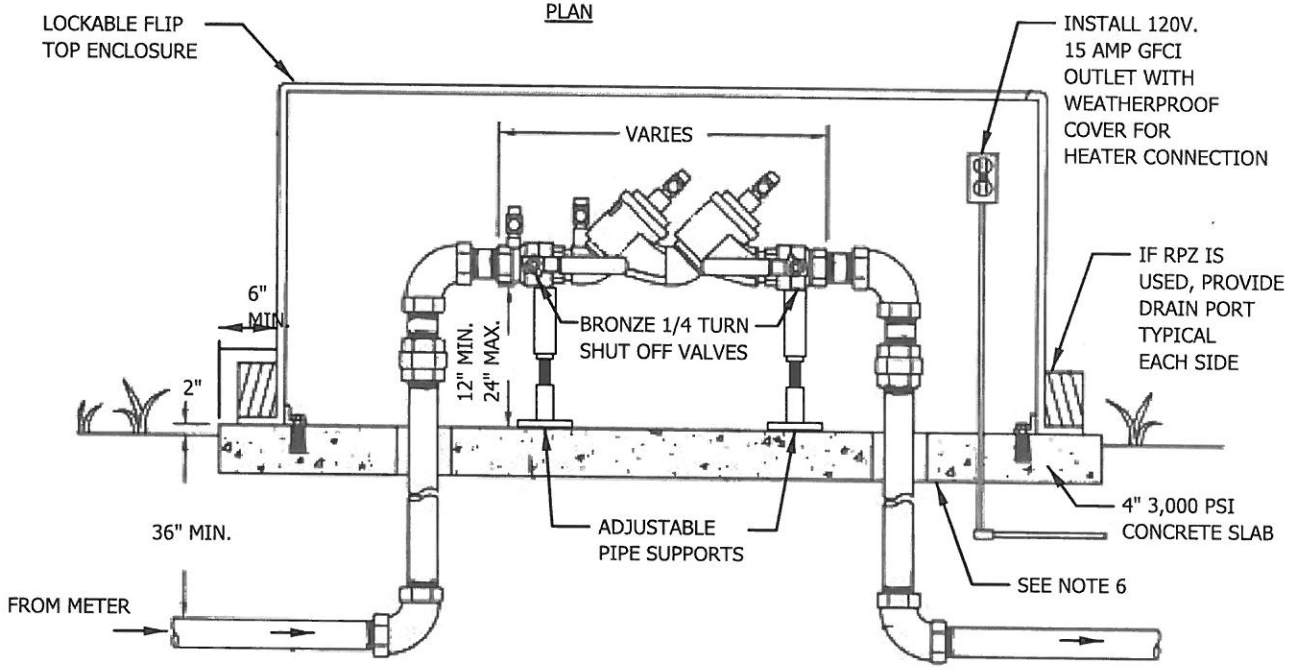

SECTION

NOTES:

1) BASED ON DEGREE OF HAZARD USE EITHER A NO LEAD DOUBLE CHECK VALVE ASSEMBLY OR A NO LEAD REDUCED PRESSURE ZONE ASSEMBLY. SELECTED TYPE MUST BE APPROVED BY THE CITY.

2) BACKFLOW PREVENTION ASSEMBLY SHALL BE INSTALLED ON THE CUSTOMERS' SIDE OF METER WITHIN 5 FEET OF THE METER BOX. ALTERNATE LOCATION MUST BE APPROVED BY THE CITY.

3) MINIMUM INSULATE CLASS I OR CLASS II ASSE 1060 WEATHERPROOF ENCLOSURE REQUIRED. (HEATING OPTIONAL)

4) SLOPE CONCRETE PAD TO DRAIN PORTS.

5) PROPERTY OWNER SHALL BE RESPONSIBLE FOR MAINTENANCE AND OPERATION OF BACKFLOW ASSEMBLY AND COMPLIANCE WITH TESTING AND REPORTING REQUIREMENTS.

6) CONCRETE SLAB 3,000 PSI @ 28 DAYS (CHECK ENCLOSURE SIZE FOR SLAB DIMENSIONS)

STANDARD 1 1/2" - 2" BACKFLOW ASSEMBLY

DATE:	REVISIONS

STANDARD DETAIL

DATE: 10-03-16

SHEET 1 OF 1

STD. No. W-2.05

CITY OF CLAREMONT, NORTH CAROLINA · 1893 ·

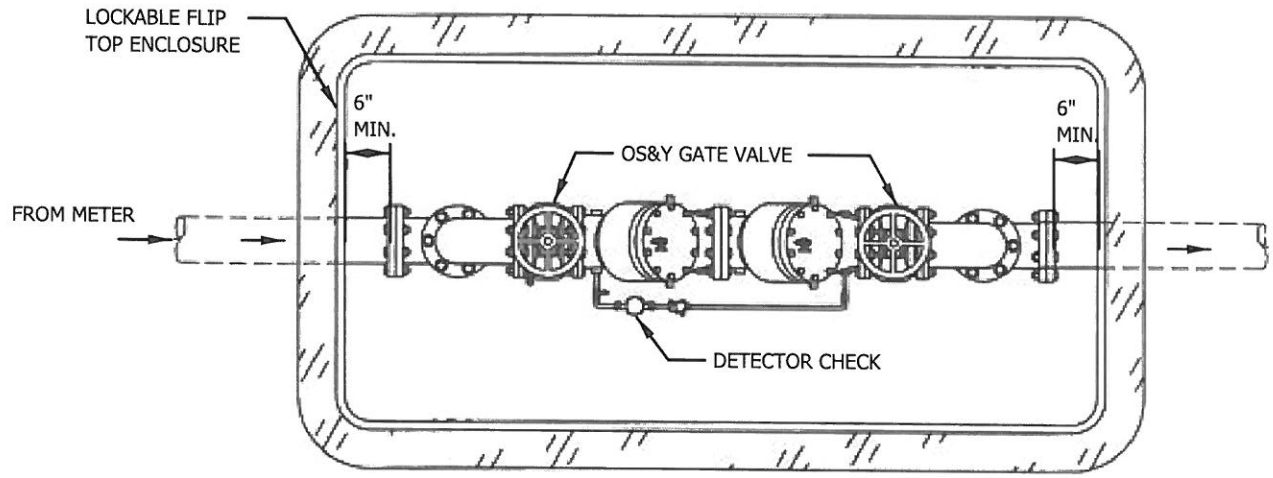

PLAN

NOTES:

1) BASED ON DEGREE OF HAZARD USE EITHER A NO LEAD DOUBLE CHECK VALVE ASSEMBLY OR A NO LEAD REDUCED PRESSURE ZONE ASSEMBLY. SELECTED TYPE MUST BE APPROVED BY THE CITY.

2) BACKFLOW PREVENTION ASSEMBLY SHALL BE INSTALLED ON THE CUSTOMERS' SIDE OF METER WITHIN 5 FEET OF THE METER BOX. ALTERNATE LOCATION MUST BE APPROVED BY THE CITY.

3) MINIMUM INSULATE CLASS I ASSE 1060 HEATED AND INSULATED WEATHERPROOF ENCLOSURE REQUIRED.

4) SLOPE CONCRETE PAD TO DRAIN PORTS.

5) PROPERTY OWNER SHALL BE RESPONSIBLE FOR MAINTENANCE AND OPERATION OF BACKFLOW ASSEMBLY AND COMPLIANCE WITH TESTING AND REPORTING REQUIREMENTS.

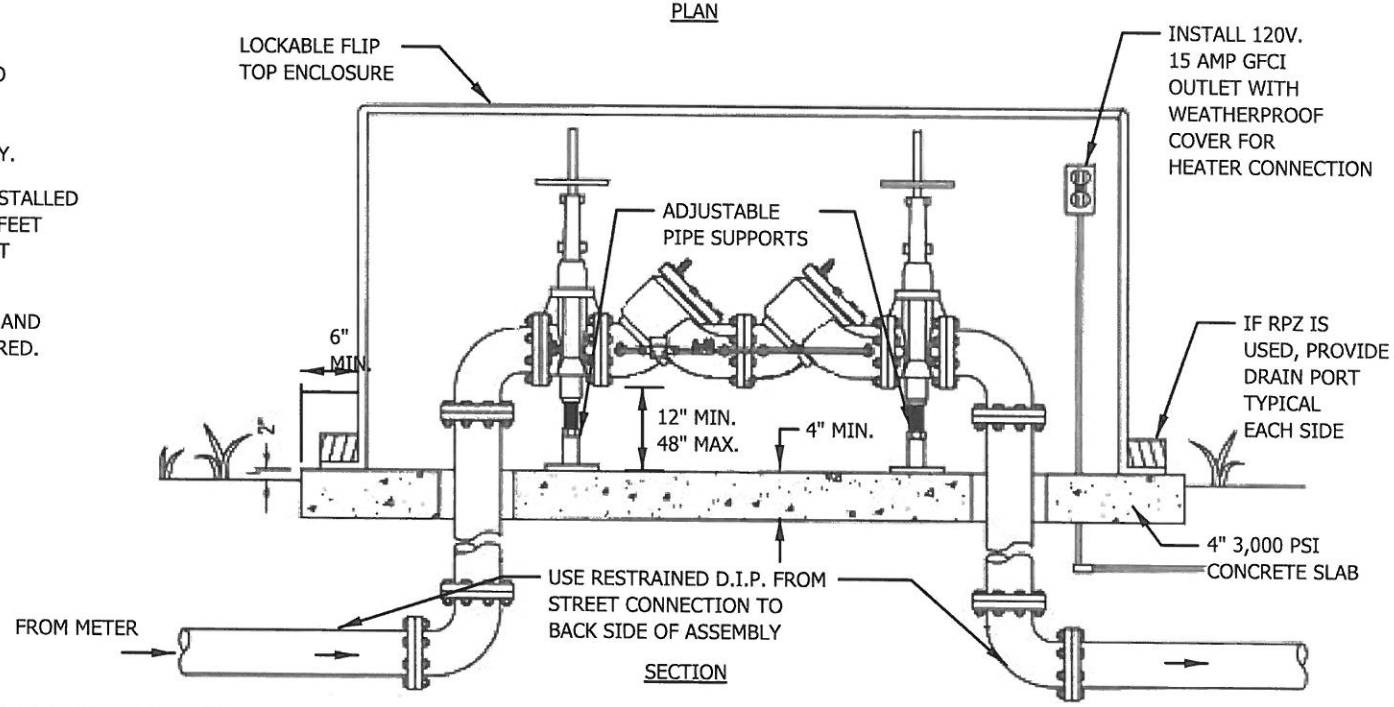

SECTION

STANDARD 3" AND LARGER BACKFLOW ASSEMBLY

DATE:	REVISIONS

STANDARD DETAIL

DATE: 10-03-16

SHEET 1 OF 1

STD. No. W-2.06

CITY OF CLAREMONT, NORTH CAROLINA · 1893 ·

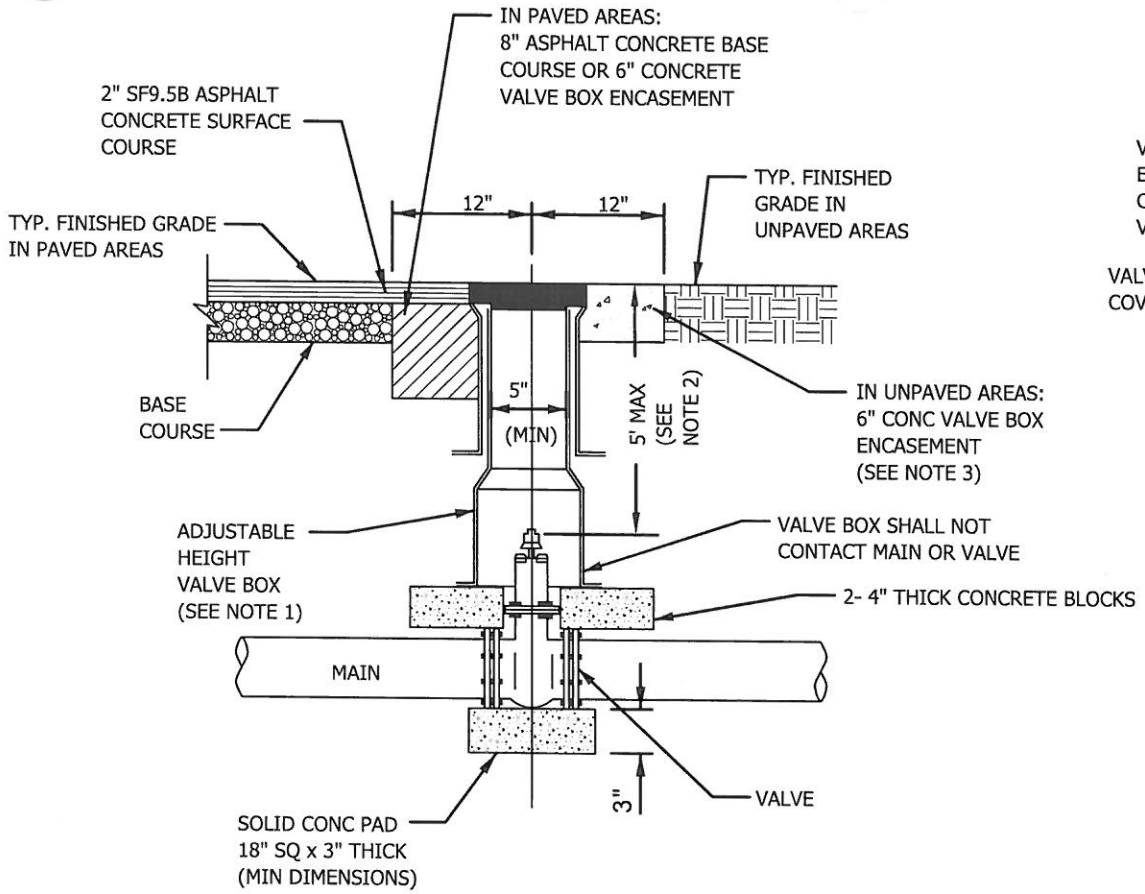

SECTION

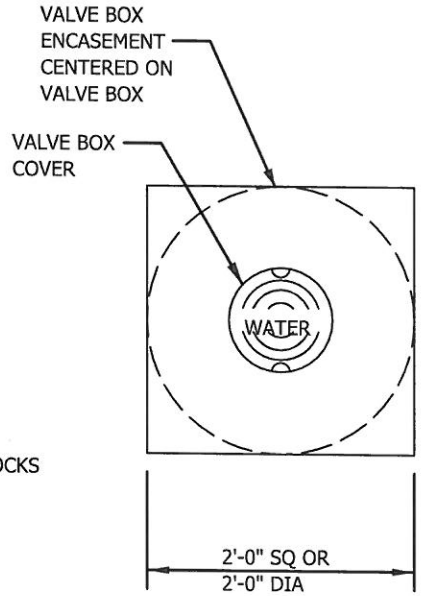

PLAN

NOTES:

1) DIP MAY BE USED FOR VALVE BOX EXTENSIONS.

2) WHERE DEPTH OF VALVE OPERATING NUT IS GREATER THAN 5', PROVIDE AND INSTALL EXTENSION STEM USING A MANUFACTURER APPROVED EXTENSION KIT. DEPTH OF EXTENDED OPERATING NUT SHALL BE NO GREATER THAN 2'.

3) PRECAST CONCRETE ENCASEMENT IS ALLOWED OUTSIDE OF PAVED AREAS.

4) VALVES LARGER THAN 12" MAY REQUIRE LARGER, THICKER CONCRETE SUPPORT PADS.

VALVE BOX INSTALLATION

DATE:	REVISIONS

STANDARD DETAIL

DATE: 10-03-16

SHEET 1 OF 1

STD. No. W-2.07

CITY OF CLAREMONT, NORTH CAROLINA · 1893 ·

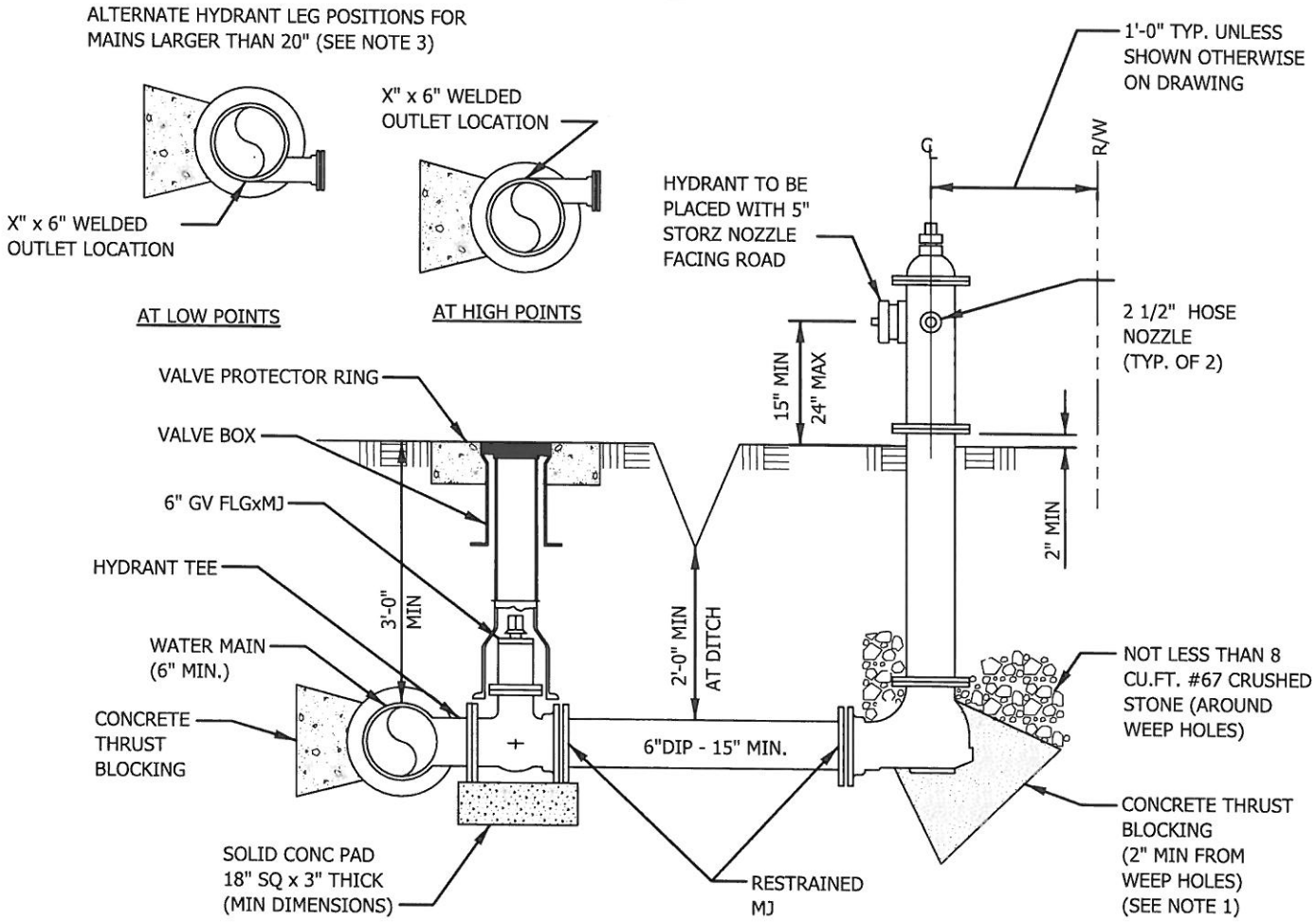

NOTES:

1) POUR CONCRETE SO THAT NO FITTING OR FLANGES ARE COVERED.
2) HYDRANT STANDPIPE TO BE EXTENDED AS NECESSARY TO MATCH FIN GROUND ELEVATION.
3) AT LOCATIONS INDICATED ON PLANS FOR MAINS LARGER THAN 20", USE ALTERNATE HYDRANT LEG POSITION AS SHOWN ABOVE WITH WELDED OUTLETS IN LIEU OF TEES.

FIRE HYDRANT ASSEMBLY

DATE:	REVISIONS

STANDARD DETAIL

DATE: 10-03-16

SHEET 1 OF 1

STD. No. W-2.08

CITY OF CLAREMONT, NORTH CAROLINA · 1893 ·

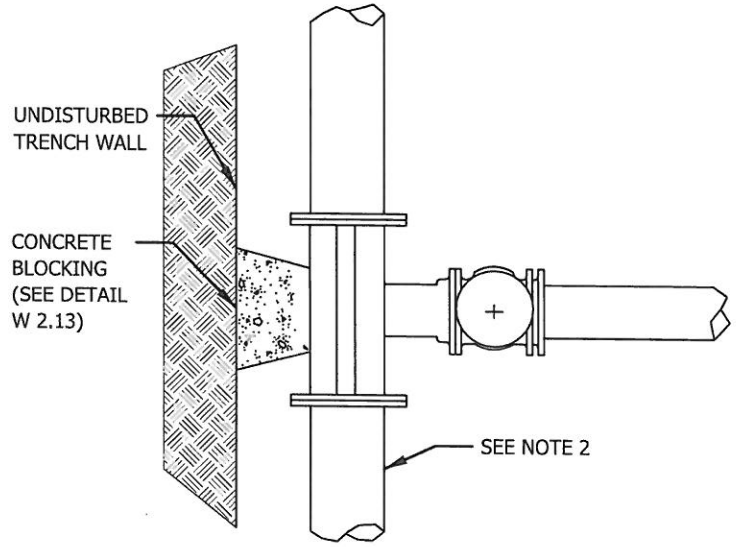

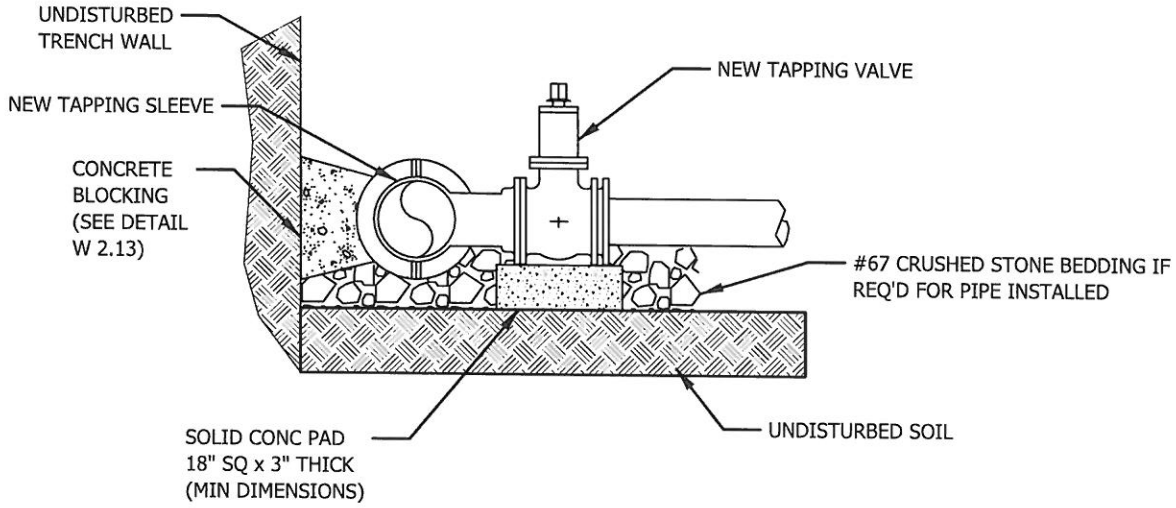

NOTES:

1) ALL FITTINGS SHALL BE COVERED WITH 10 MIL POLYETHLENE SHEETS PRIOR TO POURING CONCRETE BLOCKING.

2) P.V.C. PIPES SHALL BE SUPPORTED EITHER SIDE OF SADDLE LOCATION WITH CONCRETE ENCASEMENT PRIOR TO INSTALLING SADDLE.

3) VALVES LARGER THAN 12" MAY REQUIRE LARGER, THICKER CONCRETE SUPPORT PADS.

TAPPING SLEEVE AND VALVE

DATE:	REVISIONS

STANDARD DETAIL

DATE: 10-03-16

SHEET 1 OF 1

STD. No. W-2.09

CITY OF CLAREMONT, NORTH CAROLINA · 1893 ·

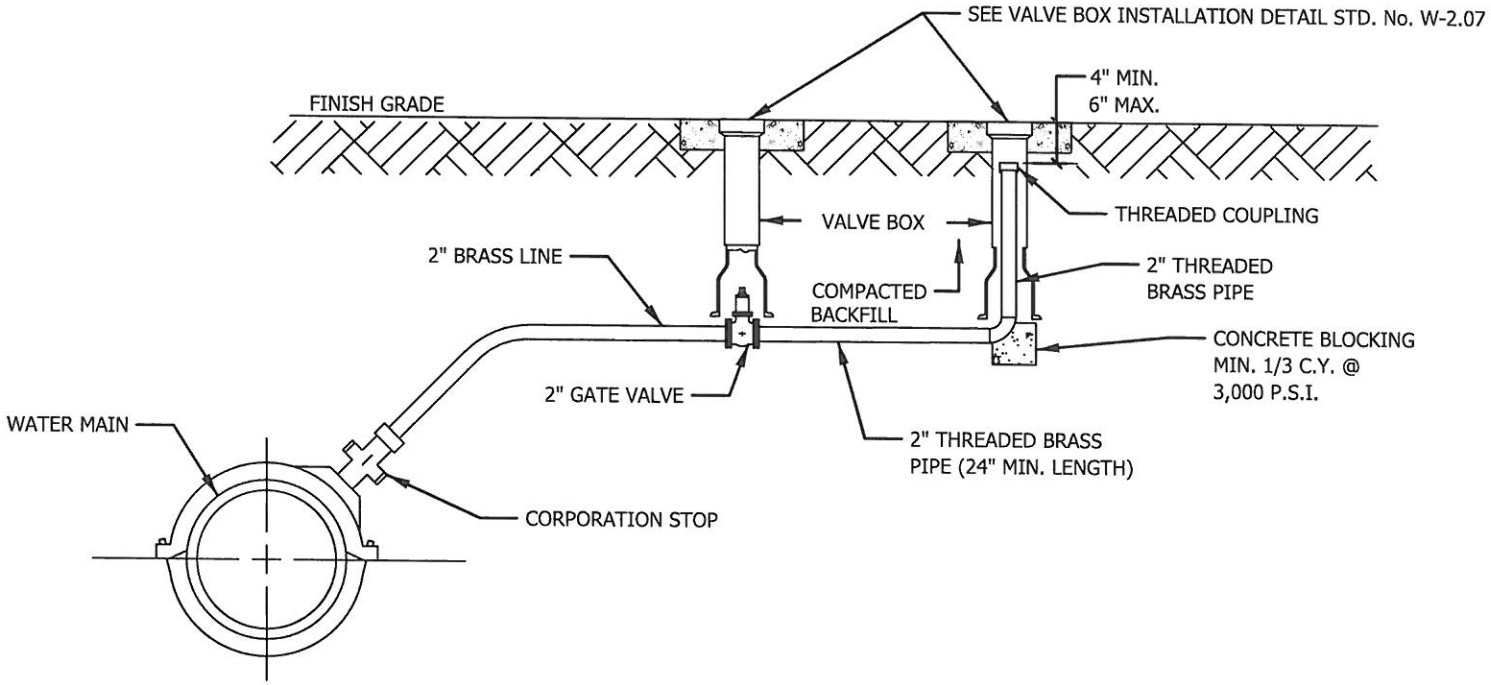

NOTES:

1) FOR DEADEND INSTALLATIONS USE A MECHANICAL JOINT TAPPED CAP, TAPPED FOR 2" NIPPLE, IN LIEU OF TAPPING MAIN. CAP SHALL BE PROPERLY INSTALLED WITH THRUST COLLAR.
2) BLOW-OFF ASSEMBLY FOR 2" MAINS ARE TO BE CONSTRUCTED AS A CONTINUATION OF THE MAIN WITHOUT THE SERVICE SADDLE AND WITHOUT THE CORPORATION STOP.
3) FOR 6" MAIN LINES AND LARGER, FIRE HYDRANT ASSEMBLY MAY BE USED AS A BLOW OFF.
4) IF REQUIRED AND APROVED BY THE CITY.

STANDARD 2" BLOW-OFF ASSEMBLY

DATE:	REVISIONS

STANDARD DETAIL

DATE: 10-03-16

SHEET 1 OF 1

STD. No. W-2.10

CITY OF CLAREMONT, NORTH CAROLINA · 1893 ·

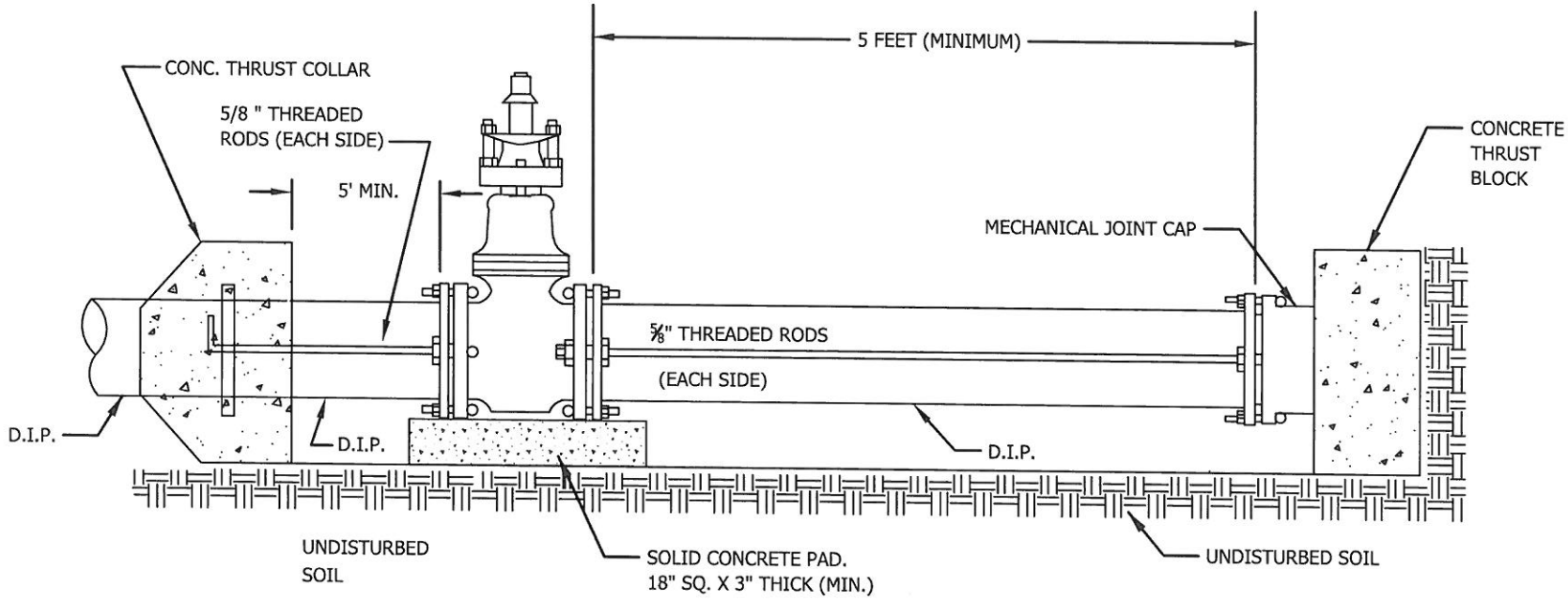

NOTE:

1) VALVES LARGER THAN 12" MAY REQUIRE LARGER, THICKER CONCRETE SUPPORT PADS.

STANDARD TEMPORARY CAPPING

DATE:	REVISIONS

STANDARD DETAIL

DATE: 10-03-16

SHEET 1 OF 1

STD. No. W-2.11

CITY OF CLAREMONT, NORTH CAROLINA · 1893 ·

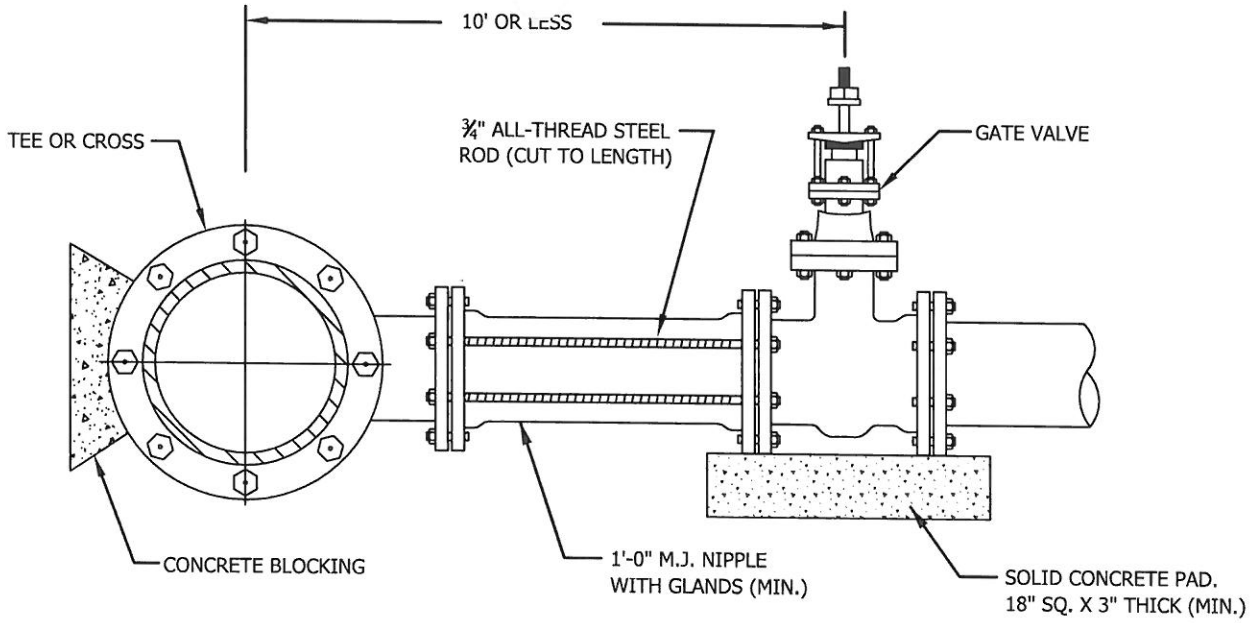

ROD REQUIREMENTS

BRANCH SIZE	NO. OF RODS
4"	2
6"	2
8"	4
12"	4
16"	6
24"	6

NOTES:

1) ONCE INSTALLED AND TIGHT, THE STEEL RODS AND BOLTS SHALL BE COATED WITH 2 COATS OF BITUMINOUS BASE PAINT.
2) SEE STANDARD THRUST BLOCK DETAIL STD. No. W-2.13
3) CONCRETE SHALL NOT CONTACT BOLTS OR ENDS OF MECHANICAL FITTINGS.
4) RESTRAINED JOINTS ARE ACCEPTABLE IN LIEU OF RODS.

STANDARD VALVE RODDING

DATE:	REVISIONS

STANDARD DETAIL

DATE: 10-03-16

SHEET 1 OF 1

STD. No. W-2.12

CITY OF CLAREMONT, NORTH CAROLINA · 1893 ·

SQ. FT. BEARING AREA					
FITTING	4"	6"	8"	12"	16"
90° BEND	3	5	7	10	16
D.E. OR TEE	2	3	5	8	11
45° OR LESS	1	2	4	6	8

EXCAVATE AS NEARLY VERTICAL AS POSSIBLE

PROVIDE 4 MIL POLYETHYLENE AROUND PIPE TO PREVENT CONCRETE FROM BONDING TO PIPE

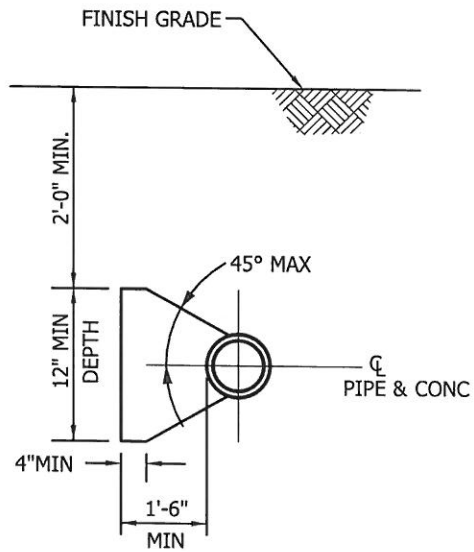

SECTION "A-A"

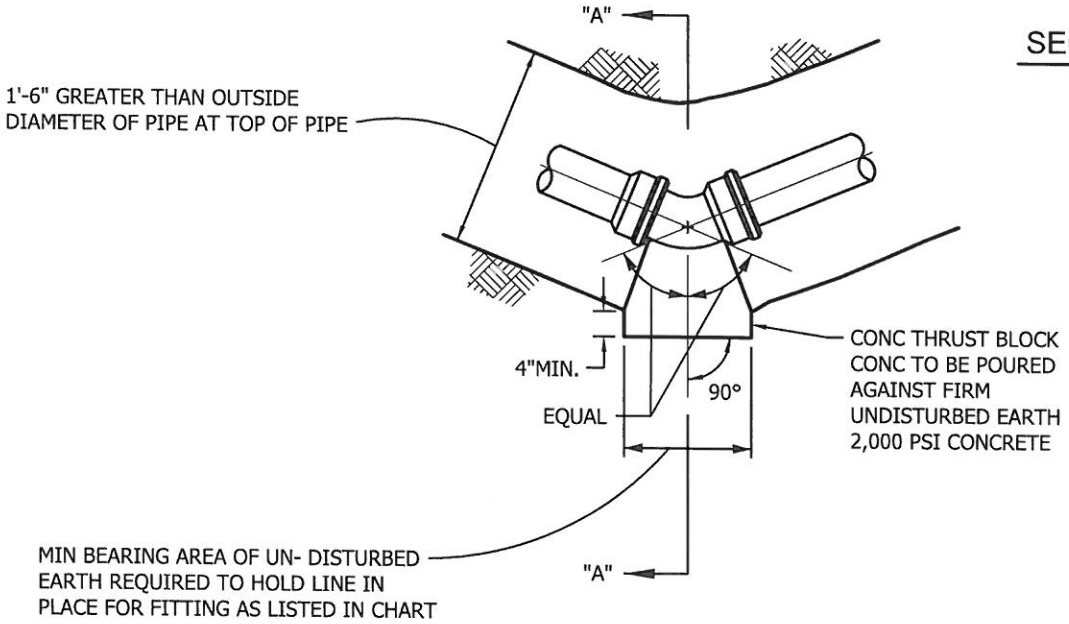

THRUST BLOCK FOR HORIZONTAL PIPE BENDS

DATE:	REVISIONS

STANDARD DETAIL

DATE: 10-03-16

SHEET 1 OF 1

STD. No. W-2.13

CITY OF CLAREMONT, NORTH CAROLINA · 1893 ·

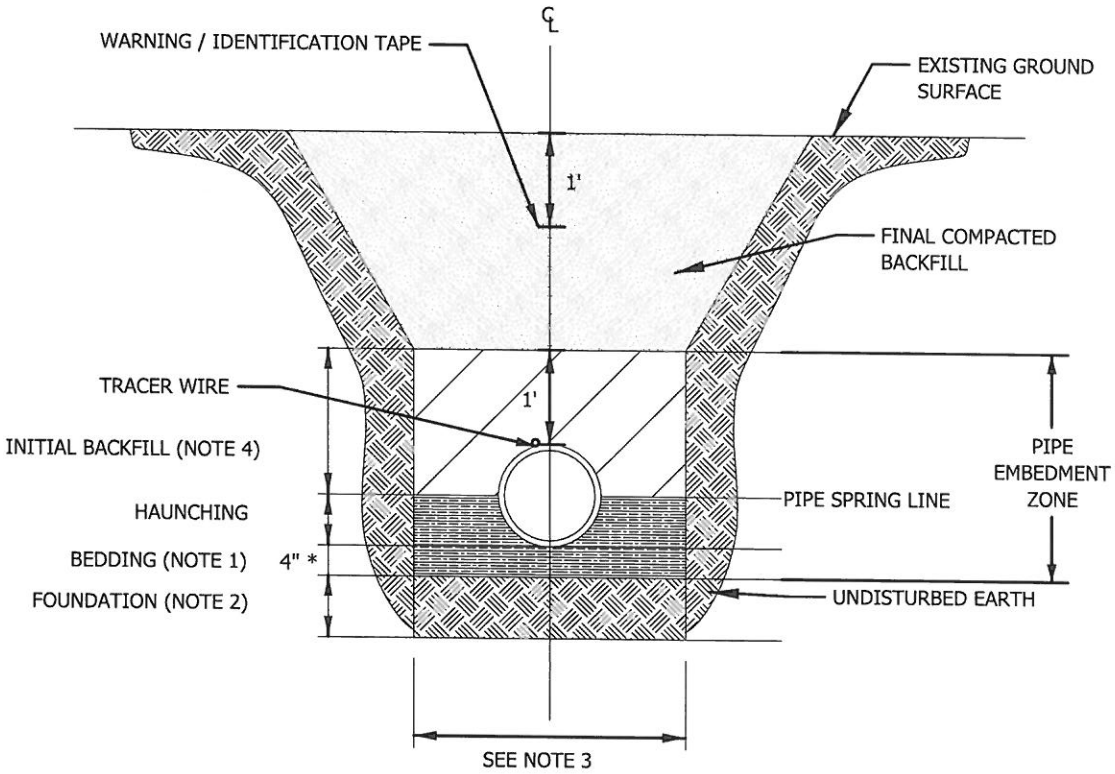

* 6" REQUIRED FOR PIPES GREATER THAN 30" IN DIAMETER

NOTES:

1) STONE BEDDING IS NOT REQUIRED IN SUITABLE CLASS I, CLASS II, AND CLASS III, SOILS. PROVIDE STONE BEDDING IN UNSTABLE CLASS IV OR CLASS V SOILS, RUNNING WATER OR OTHER UNSTABLE SOIL CONDITIONS IN BEDDING AND HAUNCH ZONE. BACKFLL WITH CLASS I, II, OR III MATERIAL IN INITIAL BACKFILL.

2) CLASS I FOUNDATION STONE SHALL BE REQUIRED WHEN SOIL CONDITIONS ARE UNSTABLE. UNDERCUT DEPTH AS DIRECTED BY CITY.

3) TRENCH WIDTH IS MINIMUM OF THE PIPE O.D. PLUS 18" AND MAXIMUM OF PIPE O.D. PLUS 24".

4) INITIAL BACKFILL SHALL BE PLACED AND COMPACTED IN 6" LIFTS. INITIAL BACKFILL SHALL CONTAIN NO MATERIAL OVER 1 1/2" IN DIAMETER, FROZEN LUMPS, OR DEBRIS.

5) BACKFILL SHALL BE COMPACTED IN ACCORDANCE WITH SPECIFICATIONS.

WATER LINE BEDDING

DATE:	REVISIONS

STANDARD DETAIL

DATE: 10-03-16

SHEET 1 OF 1

STD. No. W-2.14

CITY OF CLAREMONT, NORTH CAROLINA · 1893 ·

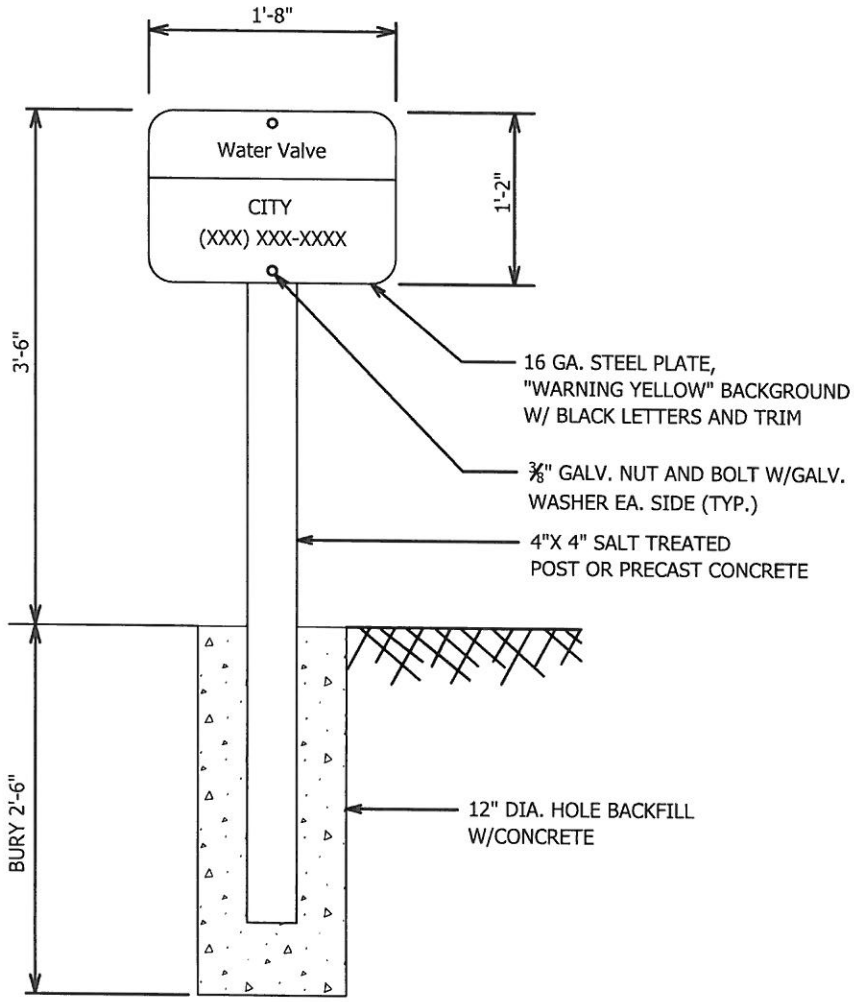

NOTE:

CONTRACTOR TO PROVIDE A SIGN FOR EACH GATE VALVE ALONG THE WATER LINE. LOCATION SHALL BE 6" WITHIN N.C.D.O.T. OR PERMANENT EASEMENT LIMITS FACING THE VALVE, OR AS DIRECTED BY THE CITY.

VALVE SIGN

DATE:	REVISIONS

STANDARD DETAIL

DATE: 10-03-16

SHEET 1 OF 1

STD. No. W-2.15

CITY OF CLAREMONT, NORTH CAROLINA · 1893 ·

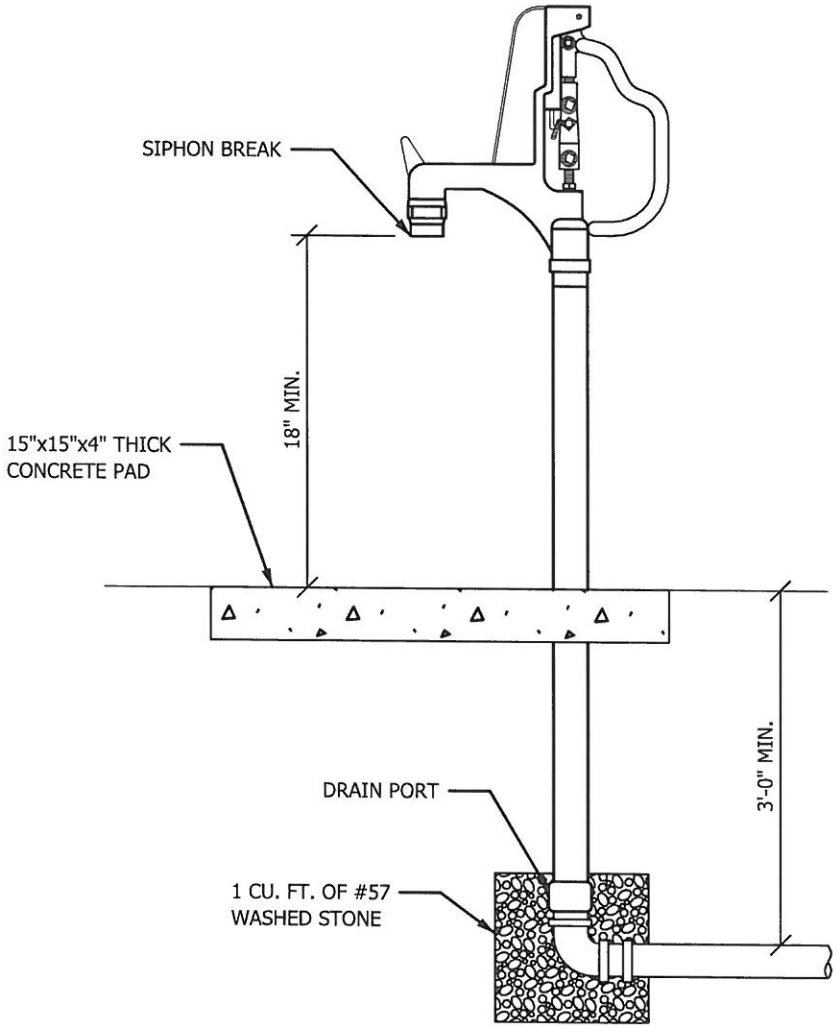

NOTES:

1) HOSE BIBB SHALL ACCOMMODATE STD. 3#4" GARDEN HOSE.
2) YARD HYDRANT SHALL BE NON-FREEZE TYPE.
3) FOR USE IN DUPLEX PUMP STATIONS, OR AS APPROVED BY THE CITY.

YARD HYDRANT

DATE:	REVISIONS

STANDARD DETAIL

DATE: 10-03-16

SHEET 1 OF 1

STD. No. W-2.16

CITY OF CLAREMONT, NORTH CAROLINA · 1893 ·

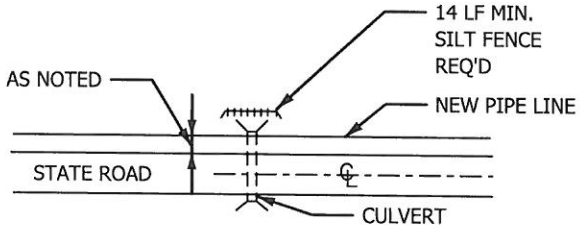

PLAN

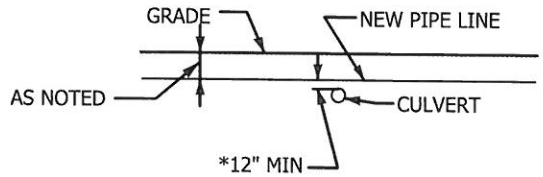

PROFILE

CONDITION 1

*18" MIN FOR CROSSING
OF SANITARY SEWER
PIPE LINE OVER CULVERT

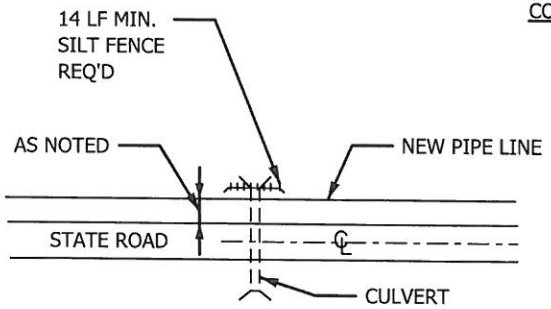

PLAN

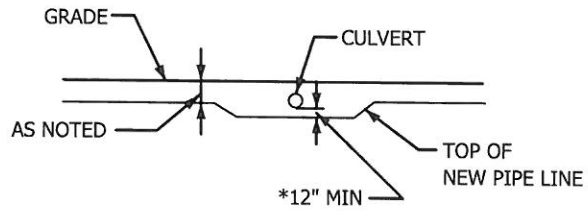

PROFILE

CONDITION 2

*18" MIN FOR CROSSING
OF SANITARY SEWER
PIPE LINE UNDER CULVERT

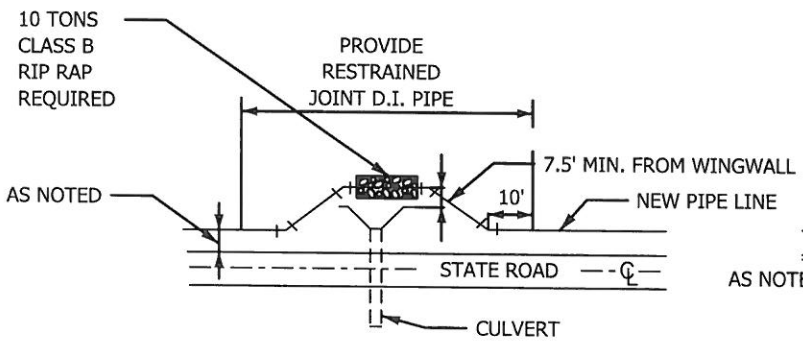

PLAN

CONDITION 3

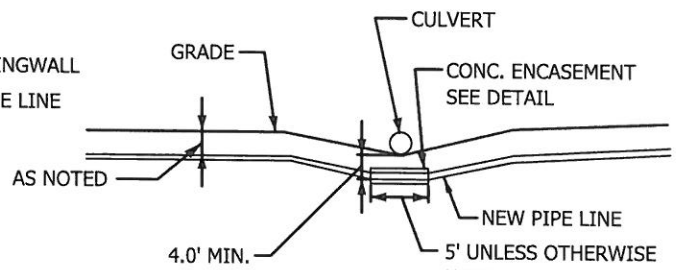

PROFILE

R.J.D.I. PIPE LINE AROUND END OF CULVERT

INSTALLATION OF PIPE LINE AT CULVERT DETAIL

DATE:	REVISIONS

STANDARD DETAIL

DATE: 10-03-16

SHEET 1 OF 1

STD. No. W-2.17

CITY OF CLAREMONT, NORTH CAROLINA · 1893 ·

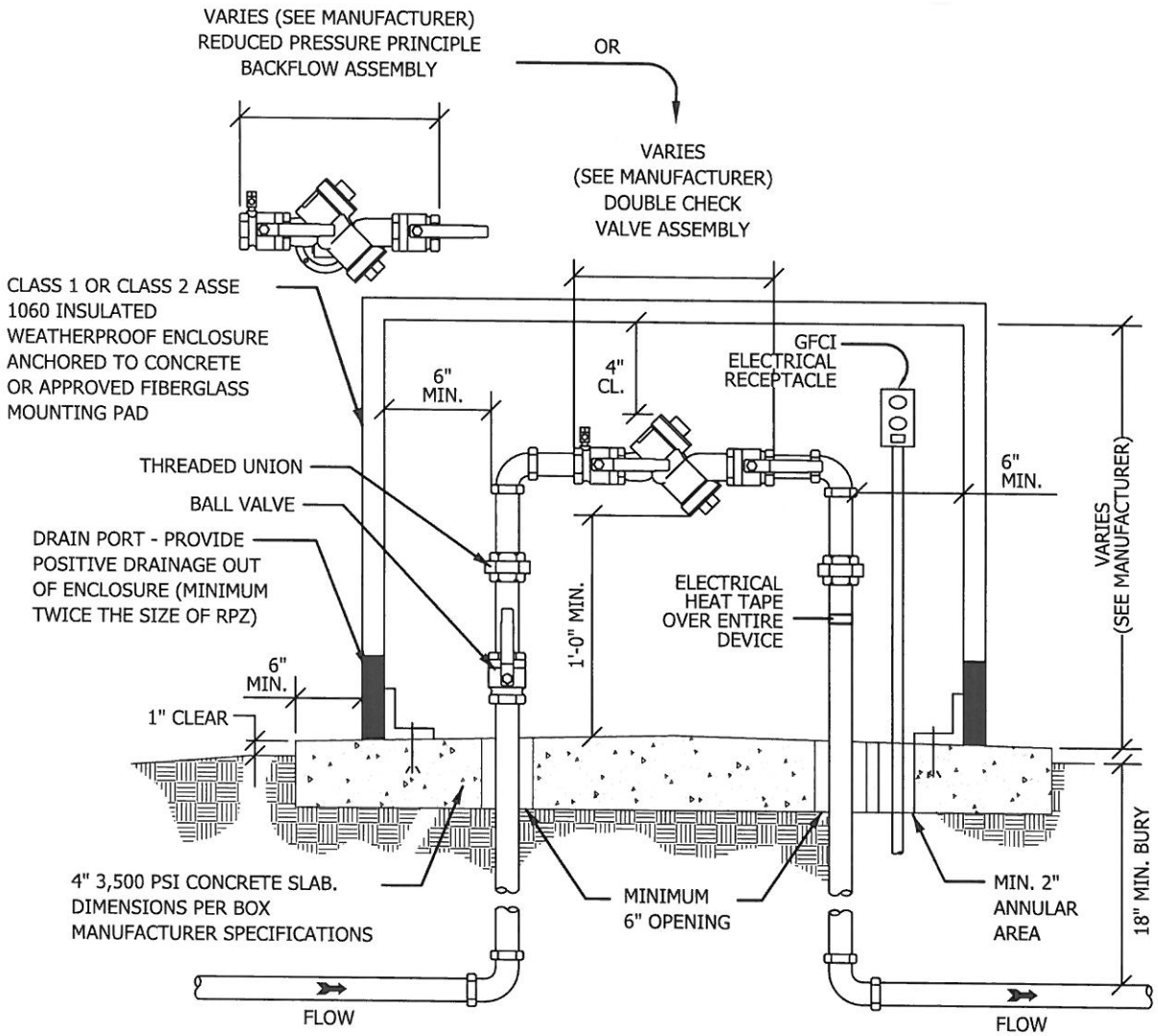

NOTES:

1) REDUCED PRESSURE PRINCIPLE BACKFLOW PREVENTIONASSEMBLY SHALL COMPLY WITH ASSE 1013 & AWWA C511.

2) DOUBLE CHECK BACKFLOW PREVENTION ASSEMBLY SHALL COMPLY WITH ASSE 1015 & AWWA C510.

3) BACKFLOW PREVENTION ASSEMBLY SHALL BE INSTALLED WITHIN 5-FT OF THE METER BOX.

4) BACKFLOW PREVENTION ASSEMBLY SHALL BE CENTERED ON CONCRETE OR APPROVED FIBERGLASS MOUNTING PAD AND CENTERED WITHIN ENCLOSURE.

5) MINIMUM INSULATED CLASS I OR CLASS II, ASSE 1060 WEATHERPROOF ENCLOSURE REQUIRED WITH HEATING.

6) 120V GFCI ELECTRICAL RECEPTACLE TO BE INSTALLED IN ACCORDANCE WITH THE NC ELECTRICAL CODE FOR OUTDOOR OPERATION.

7) PIPE MATERIAL SHALL BE PVC (SCH. 80 OR BETTER), COPPER (TYPE K) OR BRASS (ASTM B43).

8) INSTALLATION SHALL BE IN COMPLIANCE WITH ALL APPLICABLE CITY ORDINANCES AND SPECIFICATIONS IN ADDITION TO THE NC PLUMBING CODE.

1" RPZ OR DOUBLE CHECK BACKFLOW ASSEMBLY

DATE:	REVISIONS

STANDARD DETAIL

DATE: 10-03-16

SHEET 1 OF 1

STD. No. W-2.18

CITY OF CLAREMONT, NORTH CAROLINA · 1893 ·

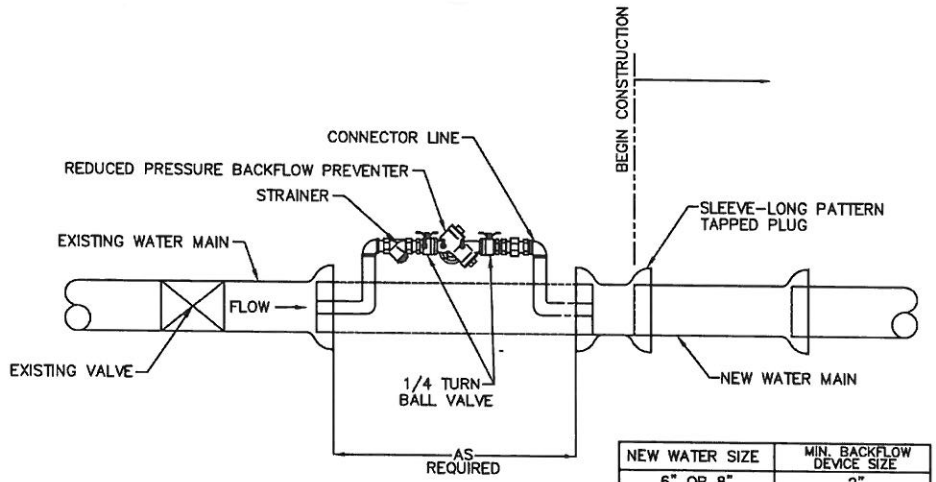

NEW WATER SIZE	MIN. BACKFLOW DEVICE SIZE
6" OR 8"	2"
12"	4"
16"	6"
24"	8"

BACKFLOW PREVENTION DEVICE FOR FILLING MAINS

NOTES:

1) INSTALL FROM EXISTING BLOW OFF ASSEMBLY TO NEW MAIN FOR FILLING, TESTING AND STERILIZING NEW MAIN.

2) BACKFLOW PREVENTION DEVICE SHALL BE OPERATED INDEPENDENT OF EXISTING MAIN.

3) BLOCKING ON EXISTING LINE IS NOT TO BE DISTURBED.

4) DEVICE SHALL BE A MINIMUM OF 12 INCHES ABOVE EXISTING GROUND.

5) FINAL CONNECTION TO EXISTING MAIN TO BE MADE ONLY AFTER TOTAL PROJECT IS ACCEPTED BY THE CITY.

6) VALVES ON EXISTING SYSTEM TO BE OPERATED BY THE CITY FORCES ONLY.

7) ONLY ONE CONNECTION WILL BE ALLOWED BETWEEN EXISTING SYSTEM AND THE NEW CONSTRUCTION UNTIL TESTING AND DISINFECTION ARE COMPLETE.

8) REDUCE PRESSURE ZONE ASSEMBLIES (RP) MUST CONFORM TO CITY'S BACKFLOW ORDANCE.

9) ALL LOCATIONS FOR BPA'S REQUIRE APPROVAL OF THE DIRECTOR OF UTILITIES AND MUST BE ON THE PROPERTY OWNER'S SIDE OF THE METER AND OUTSIDE OF THE RIGHT-OF-WAY.

10) EACH BPA IS REQUIRED TO BE TESTED BY AN APPROVED CERTIFIED TESTER PRIOR TO PLACING THE WATER SYSTEM IN SERVICE.

BACKFLOW PREVENTION DEVICE FOR FILLING NEW MAINS

DATE:	REVISIONS

STANDARD DETAIL

DATE: 10-03-16

SHEET 1 OF 1

STD. No. W-2.19

CITY OF CLAREMONT, NORTH CAROLINA · 1893 ·