Standard Detail Index

SECTION 1 ♦ SANITARY SEWER SYSTEM

Detail #	Detail Description
S-1.01	Standard Precast Concrete Manhole
S-1.02	Outside Drop Assembly Manhole
S-1.03	Standard Inside Drop Manhole
S-1.04	"Doghouse" Type Manhole
S-1.05	Flat Top Sealed and Vented Manhole
S-1.06	Sewage Air Release Manhole
S-1.07	Standard Manhole Ring and Cover
S-1.08	Standard Manhole Ring with Bolt Down Cover
S-1.09	Standard Manhole Ring and Cover for Watertight Manholes
S-1.10	Flat Top Sealed Ring and Cover
S-1.11	Manhole Ring and Cover Anchoring
S-1.12	Manhole Steps
S-1.13	Standard Sanitary Sewer Service
S.1.14	Sewer Lateral Connection to Manhole
S-1.15	Anti-Seep Collar
S-1.16	Ductile Iron (Rigid) Pipe Gravity Sewer Bedding
S-1.17	PVC (Flexible) Gravity Sewer Pipe Bedding
S-1.18	Typical Trench Gravity Sewer and Force Main
S-1.19	Pipe Installation in Steel Encasement
S-1.20	Low Pressure Air Testing for Gravity Sewer Mains
S-1.21	Typical Two Compartment Grease Interceptor Tank
S-1.22	Typical Pump Station Layout

♦ ♦ ♦ ♦ ♦

NOTES:

1) PRECAST MANHOLE SHALL CONFORM TO ASTM C478 WITH AASHTO M198 BUTYL SEALS BETWEEN JOINTS AND 6" ADHESIVE TAPE ON THE OUTSIDE OF JOINTS.

2) MANHOLE RING SHALL BE FLUSH WITH PAVED SURFACES AND LAWNS. SET 2 TO 3 FEET ABOVE GRADE IN UNIMPROVED AREAS.

3) MANHOLE RIMS SHALL BE SET 2 FEET ABOVE 100 YEAR FLOOD ELEVATION, OR USE WATERTIGHT LIDS.

4) USE 5' DIA. MANHOLE WHERE DEPTH IS GREATER THAN 15 FEET.

5) HOLES FOR CONNECTION OF PIPE TO MANHOLE SHALL BE PRECAST OR CORED. DIAMETER OF HOLE SHALL NOT EXCEED OUTSIDE DIAMETER OR PIPE BY MORE THAN 3 INCHES.

6) CONNECTION OF PIPE TO MANHOLE SHALL BE MADE WATERTIGHT USING RESILIENT CONNECTORS CONFORMING TO ASTM C 923 OR NEOPRENE BOOTS EMBEDDED IN PRECAST BASE WITH STAINLESS STEEL COMPRESSED BANDS.

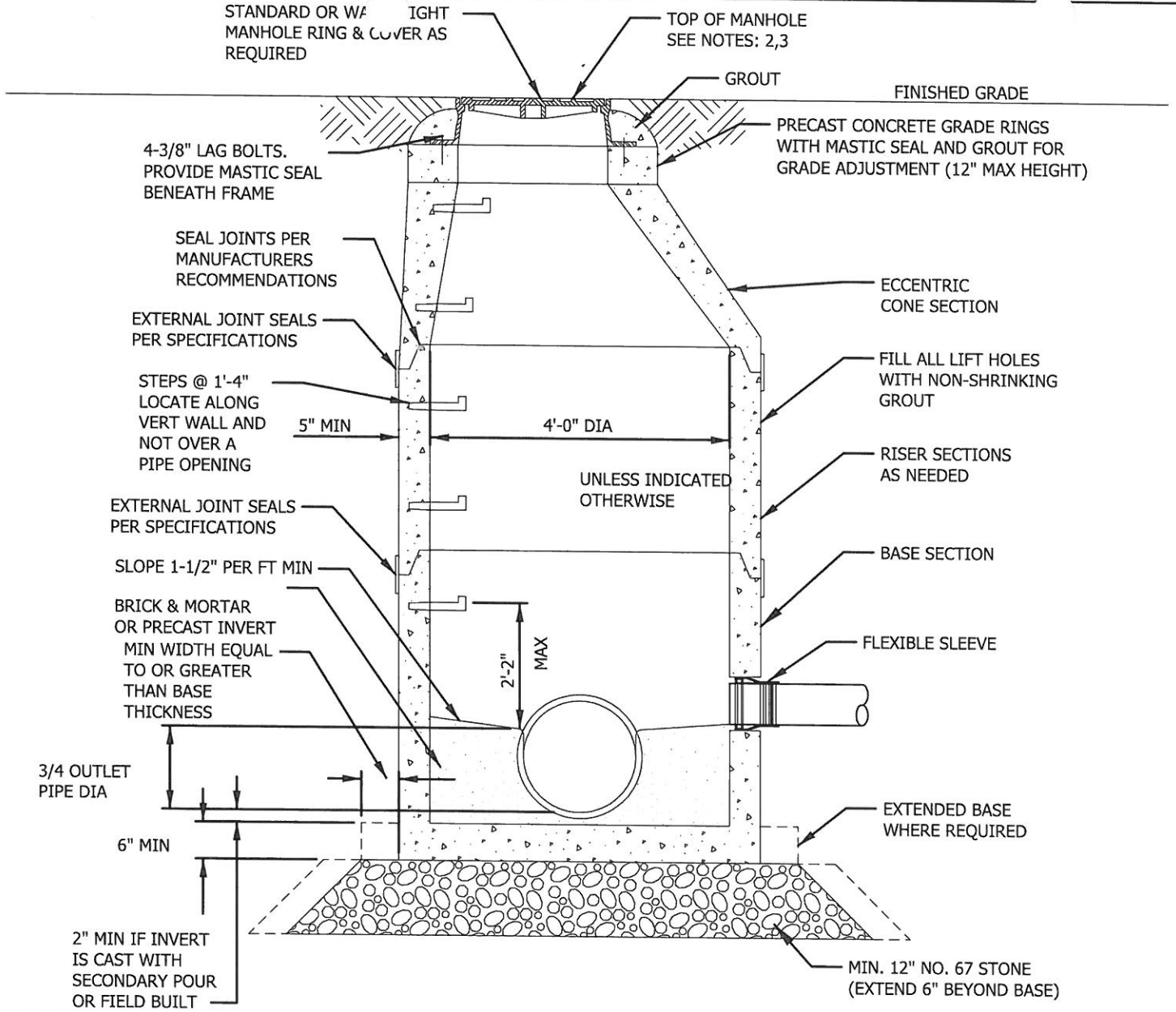

STANDARD PRECAST CONCRETE MANHOLE

DATE:	REVISIONS

STANDARD DETAIL

DATE: 10-03-16

SHEET 1 OF 1

STD. No. S-1.01

CITY OF CLAREMONT, NORTH CAROLINA · 1893 ·

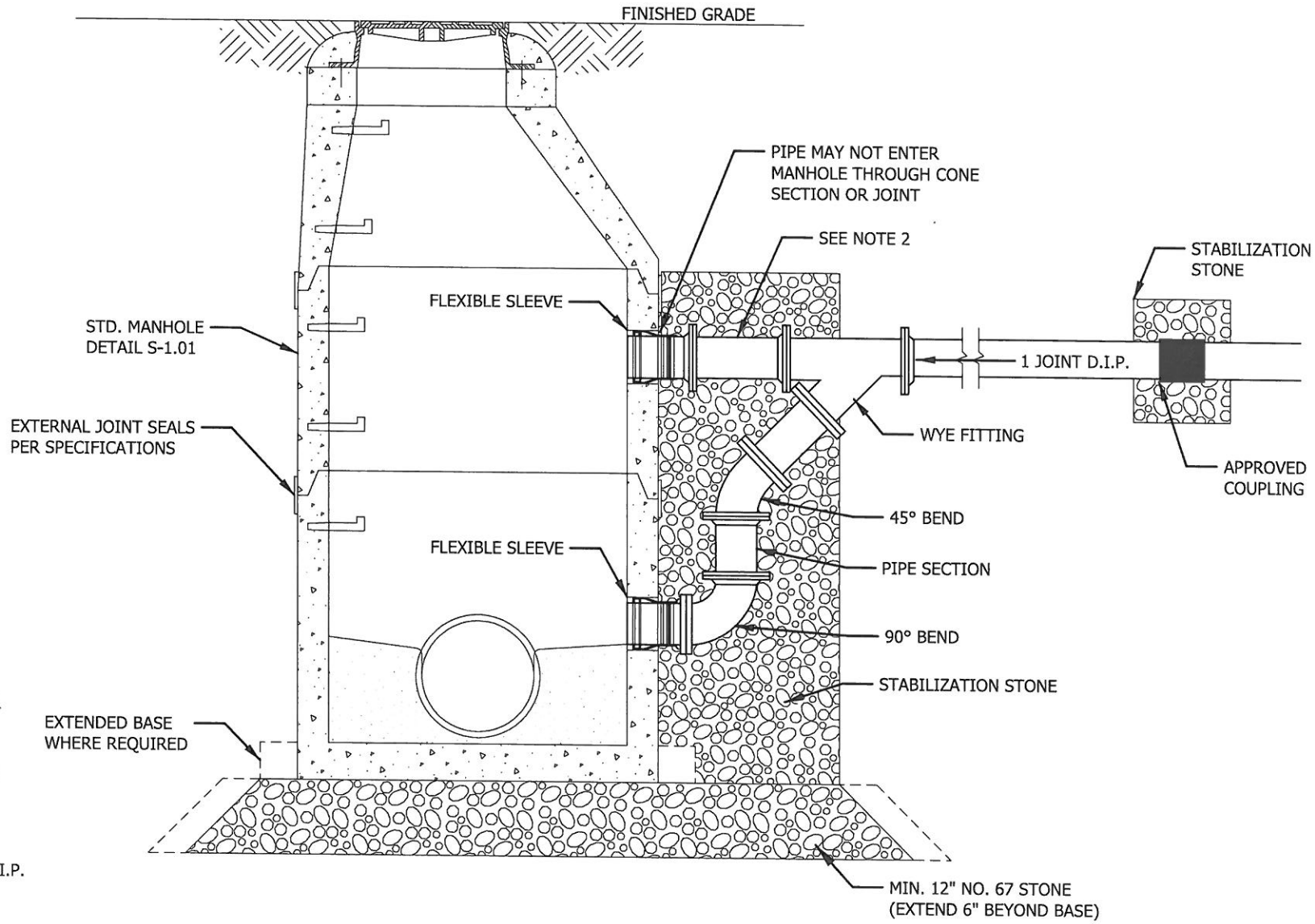

NOTES:

1) TO BE CONSTRUCTED FOR DROPS OVER 30".
2) USE TEE FITTING WHERE PIPE SIZE AND REQUIRED DROP HEIGHT PROHIBIT USE OF WYE AND 45° BEND.
3) DROP ASSEMBLY TO BE D.I.P.

OUTSIDE DROP ASSEMBLY MANHOLE

DATE:	REVISIONS

STANDARD DETAIL

DATE: 10-03-16

SHEET 1 OF 1

STD. No. S-1.02

CITY OF CLAREMONT, NORTH CAROLINA · 1893 ·

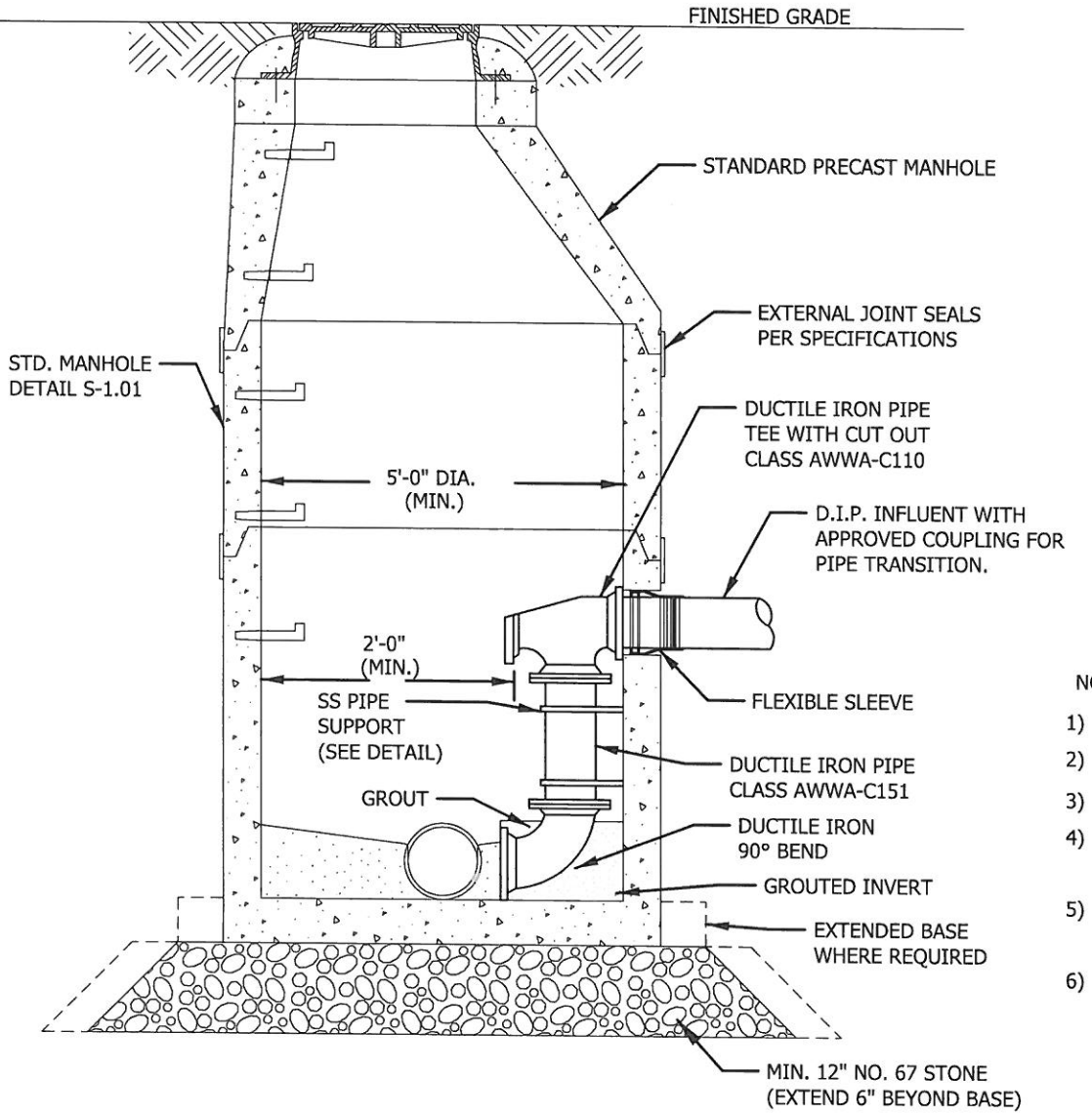

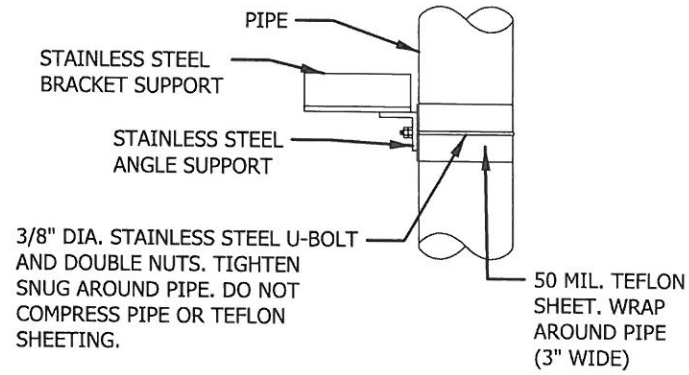

STAINLESS STEEL PIPE SUPPORT STRAP

NOTES:

1) PIPE SIZE FOR DROP TO EQUAL INFLOW SEWER PIPE SIZE.
2) MECH. JOINT OR PUSH-ON FITTINGS,ALL BELL, TO BE USED.
3) SAW-CUT OR DRILL ALL HOLES FOR PIPE AND BOLTS.
4) DROP-MANHOLE MANDATORY WHEN DIFFERENTIAL BETWEEN INVERTS IS GREATER THAN 30".
5) INSTALL STAINLESS STEEL STRAPS WITHIN 12" OF EACH PIPE JOINT AND AT 18 INCH MAX SPACING (MIN 2 REQD).
6) INSIDE DROP TO BE USED ONLY WITH PRIOR APPROVAL FROM CITY.

STANDARD INSIDE DROP MANHOLE

DATE:	REVISIONS

STANDARD DETAIL

DATE: 10-03-16

SHEET 1 OF 1

STD. No. S-1.03

CITY OF CLAREMONT, NORTH CAROLINA · 1893 ·

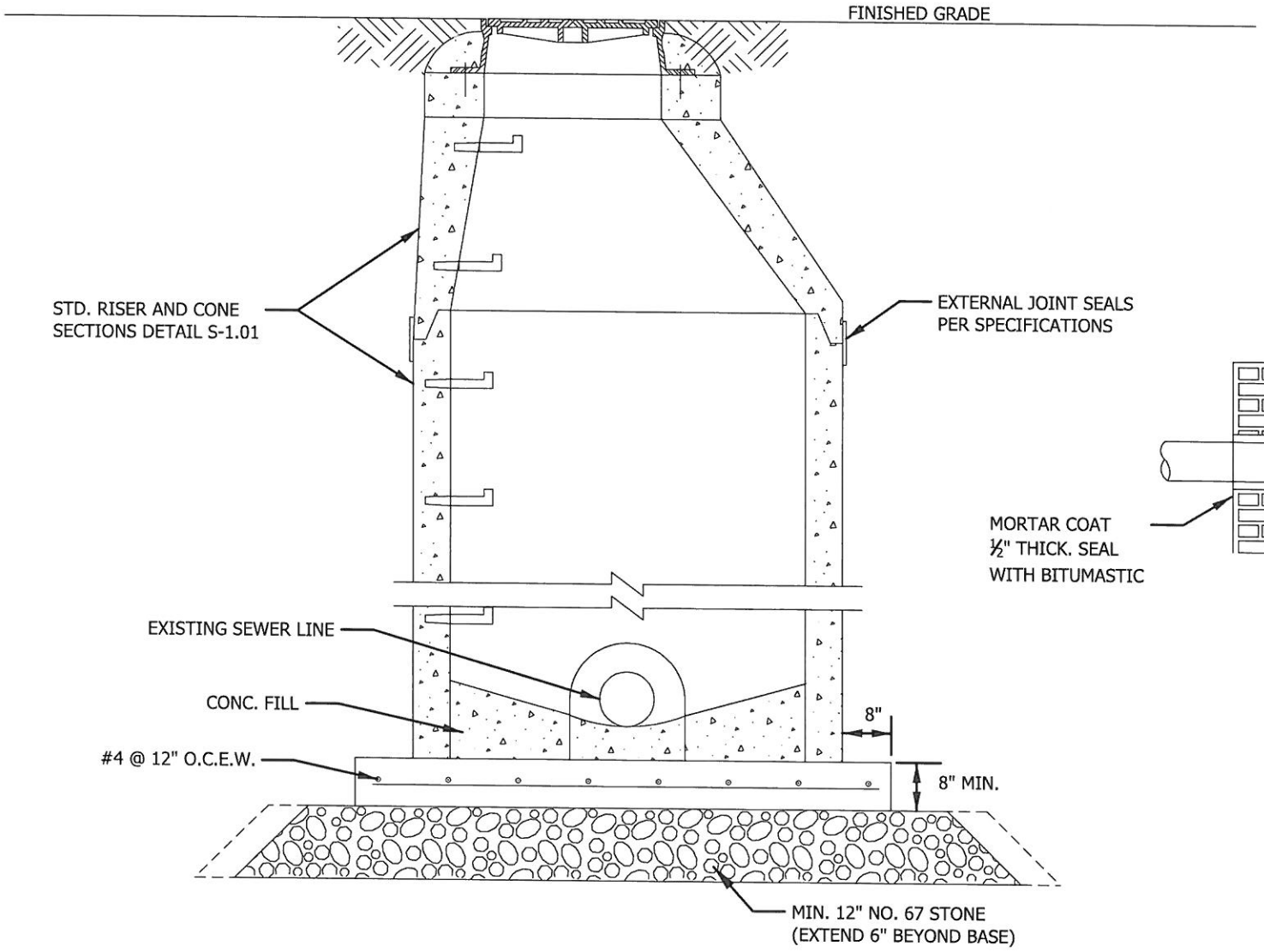

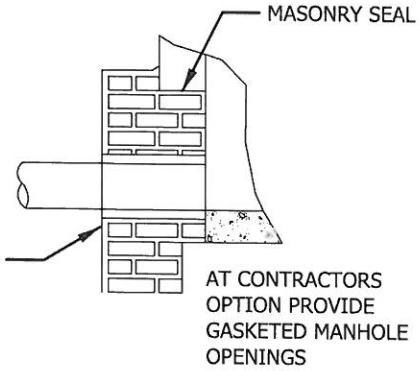

NOTE:
USE OF "DOGHOUSE" TYPE MANHOLE MUST BE APPROVED BY THE CITY

"DOGHOUSE" TYPE MANHOLE

DATE:	REVISIONS

STANDARD DETAIL

DATE: 10-03-16

SHEET 1 OF 1

STD. No. S-1.04

CITY OF CLAREMONT, NORTH CAROLINA · 1893 ·

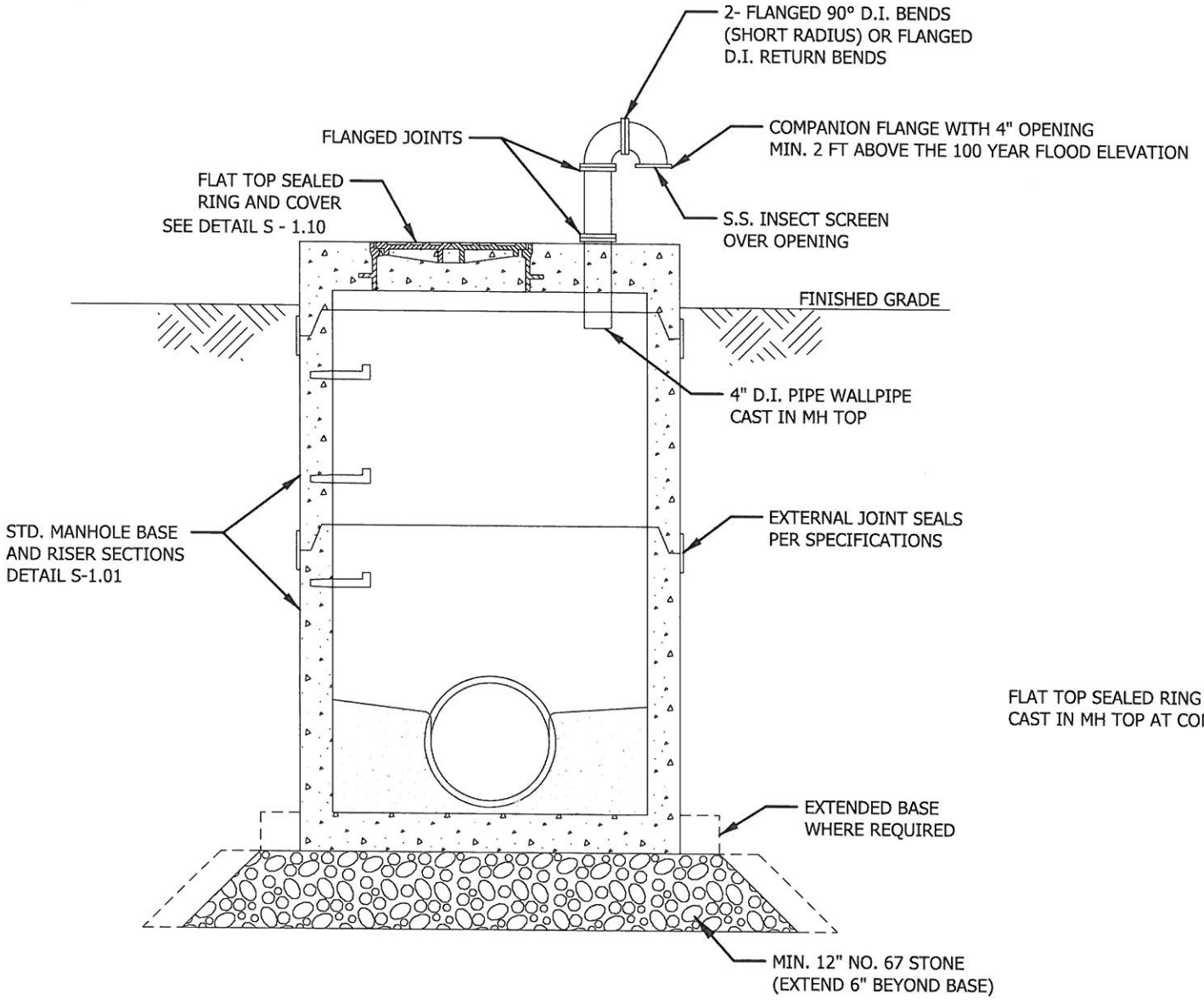

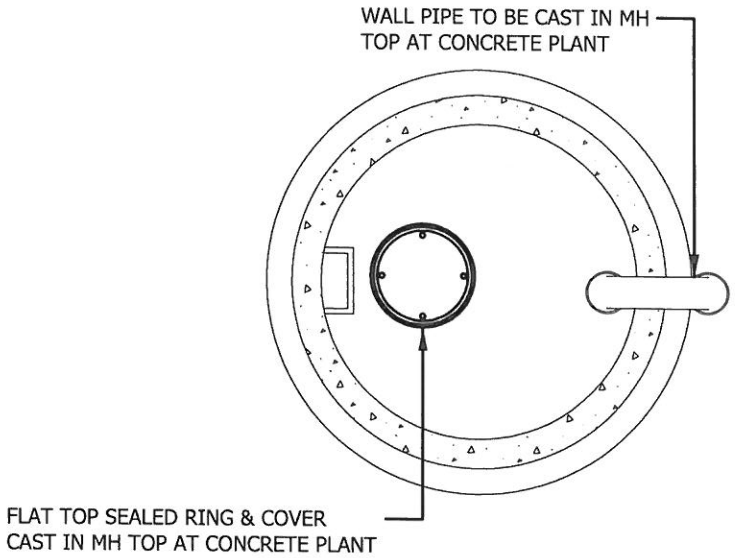

FLAT TOP SEALED AND VENTED MANHOLE

DATE:	REVISIONS

STANDARD DETAIL

DATE: 10-03-16

SHEET 1 OF 1

STD. No. S-1.05

CITY OF CLAREMONT, NORTH CAROLINA · 1893 ·

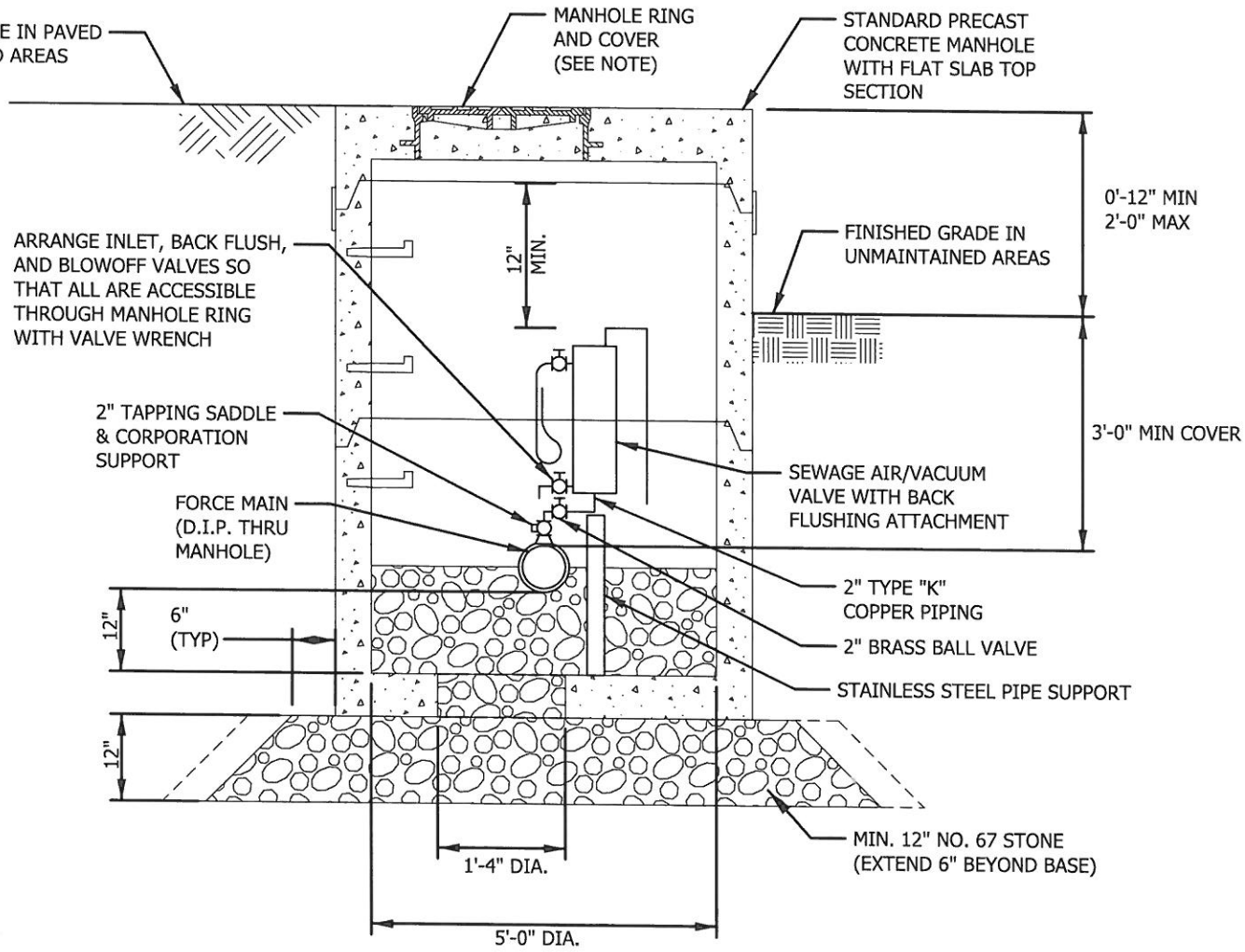

NOTE:
WHERE TOP OF SLAB IS FLUSH WITH GRADE, RING AND COVER CAST IN SLAB AS PER DETAIL S-1.10

SEWAGE AIR RELEASE MANHOLE

DATE:	REVISIONS

STANDARD DETAIL

DATE: 10-03-16

SHEET 1 OF 1

STD. No. S-1.06

CITY OF CLAREMONT, NORTH CAROLINA · 1893 ·

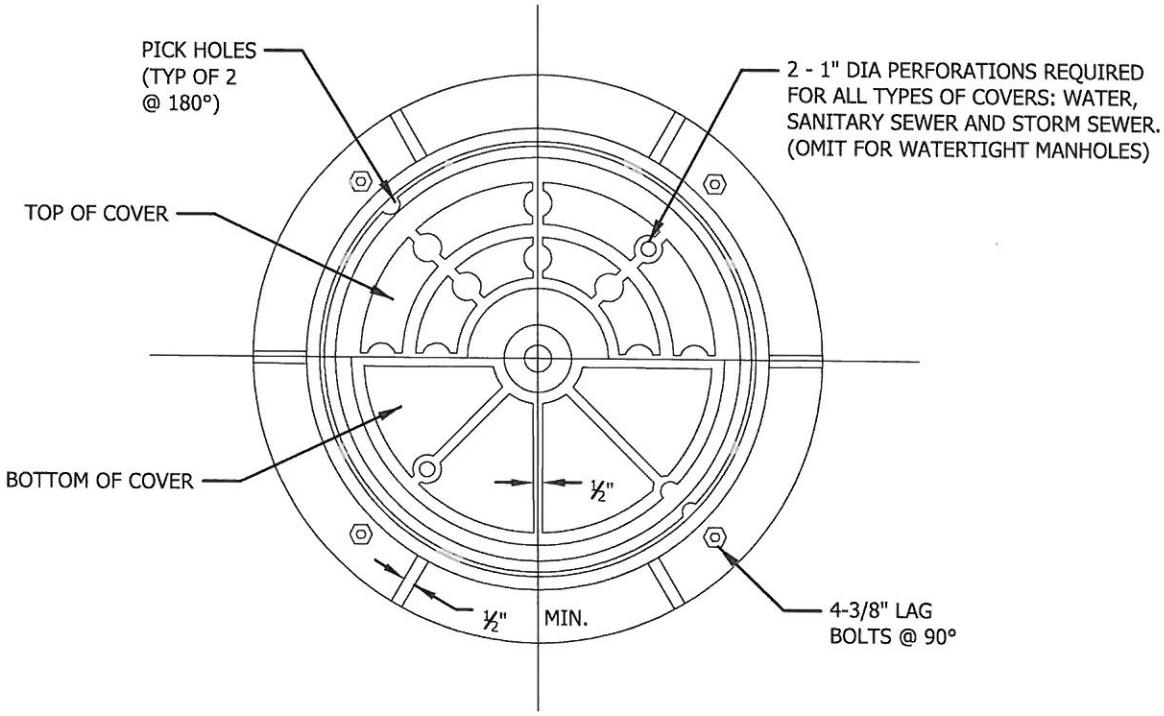

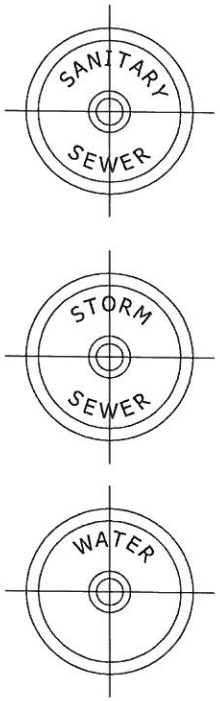

COVER LETTERING DETAIL

NOTES:

1) RING AND COVER SHALL HAVE TOTAL COMBINED WEIGHT OF 310 LB MIN. AND BE SUITABLE FOR H-20 LOADING.

2) ALL BOLTS ARE TO BE TYPE 316 STAINLESS STEEL.

3) USE COVER LETTERING AS APPROPRIATE FOR APPLICATION.

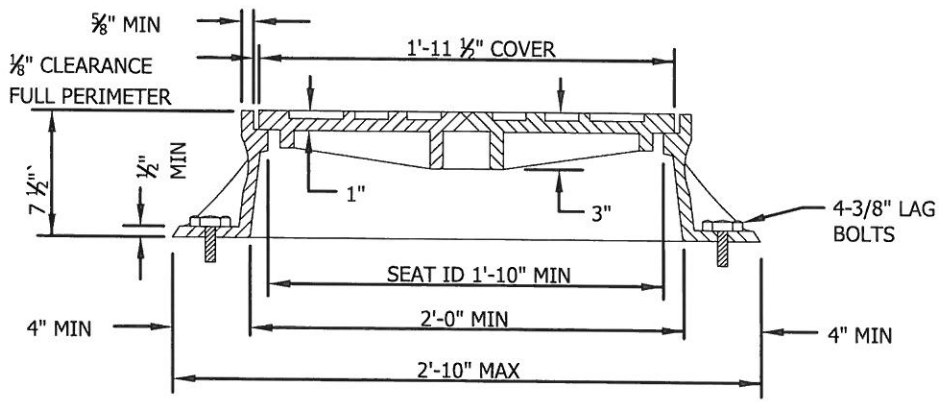

STANDARD MANHOLE RING AND COVER

DATE:	REVISIONS

STANDARD DETAIL

DATE: 10-03-16

SHEET 1 OF 1

STD. No. S-1.07

CITY OF CLAREMONT, NORTH CAROLINA · 1893 ·

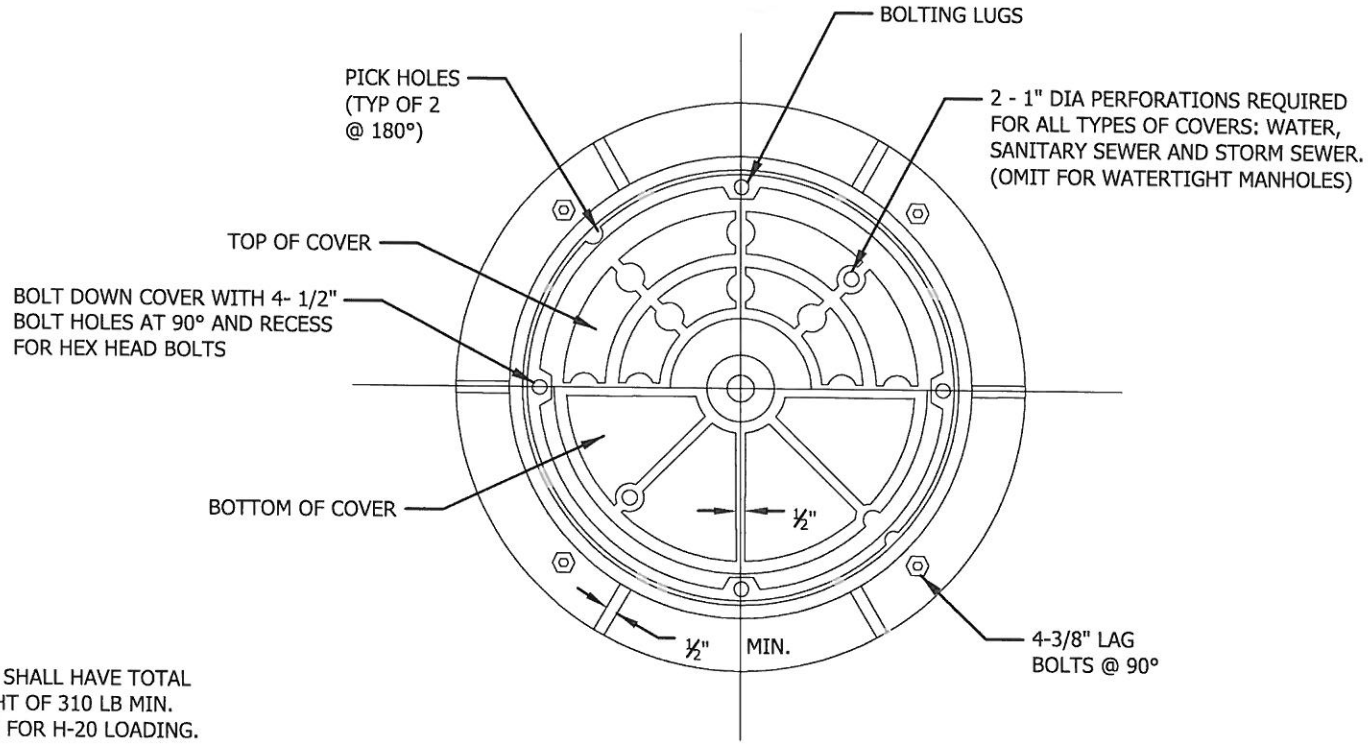

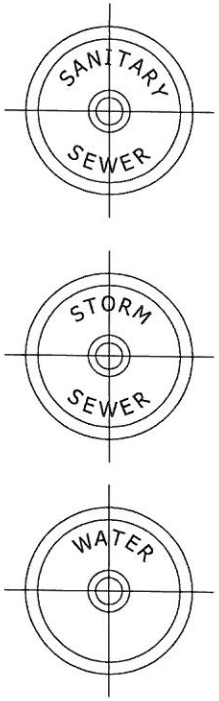

COVER LETTERING DETAIL

NOTES:

1) RING AND COVER SHALL HAVE TOTAL COMBINED WEIGHT OF 310 LB MIN. AND BE SUITABLE FOR H-20 LOADING.

2) ALL BOLTS ARE TO BE TYPE 316 STAINLESS STEEL.

3) USE COVER LETTERING AS APPROPRIATE FOR APPLICATION.

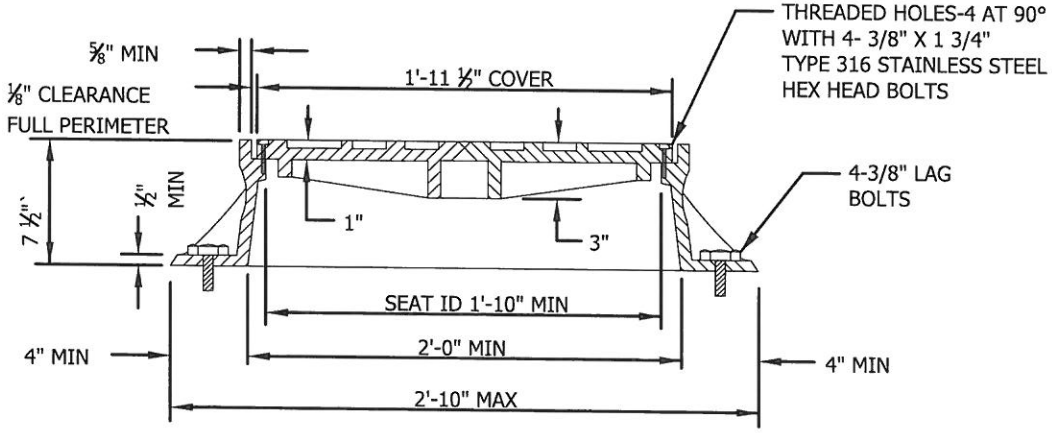

STANDARD MANHOLE RING WITH BOLT DOWN COVER

DATE:	REVISIONS

STANDARD DETAIL

DATE: 10-03-16

SHEET 1 OF 1

STD. No. S-1.08

CITY OF CLAREMONT, NORTH CAROLINA · 1893 ·

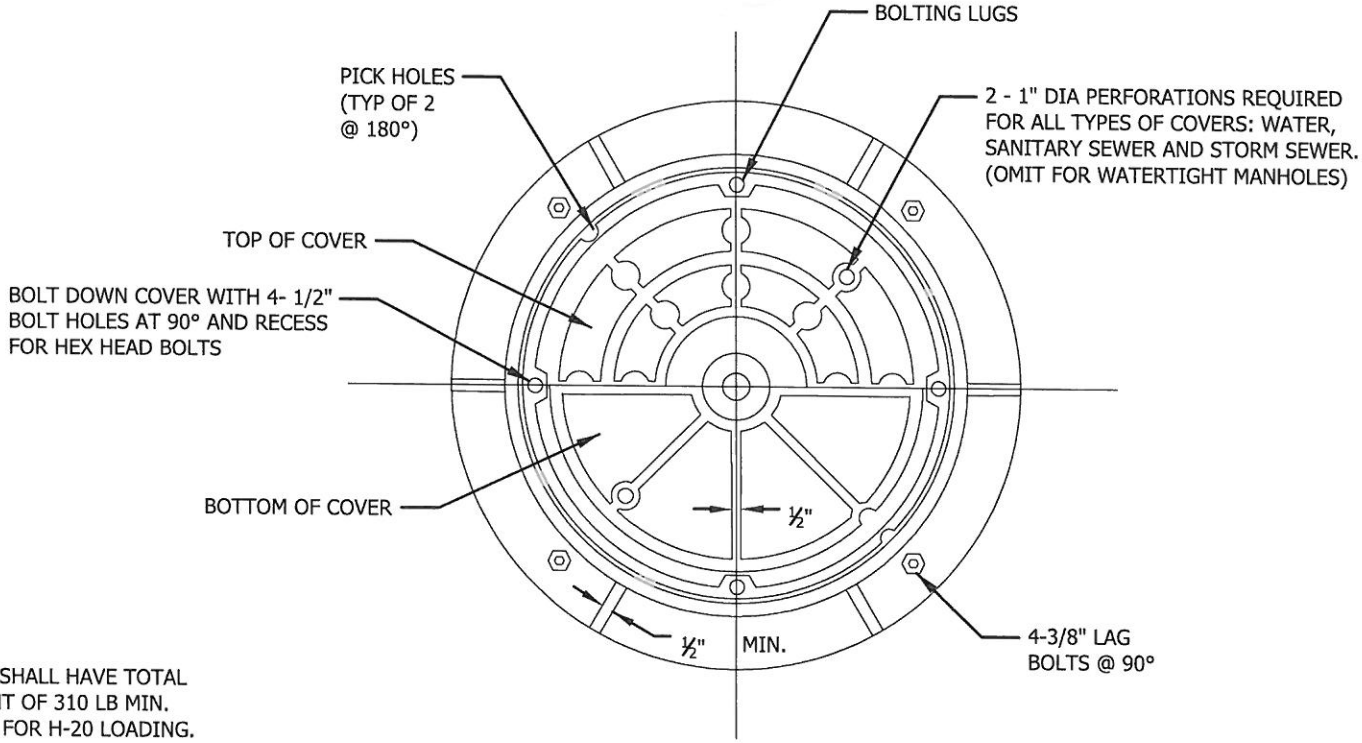

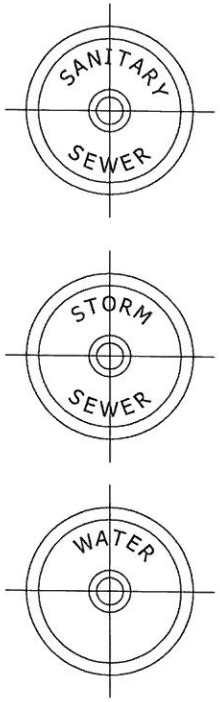

COVER LETTERING DETAIL

NOTES:

1) RING AND COVER SHALL HAVE TOTAL COMBINED WEIGHT OF 310 LB MIN. AND BE SUITABLE FOR H-20 LOADING.

2) ALL BOLTS ARE TO BE TYPE 316 STAINLESS STEEL.

3) USE COVER LETTERING AS APPROPRIATE FOR APPLICATION.

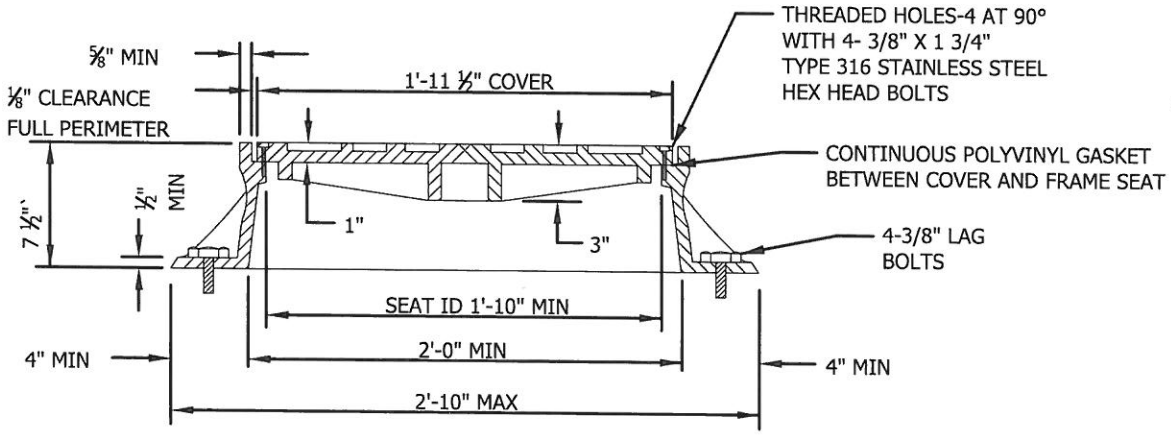

STANDARD MANHOLE RING AND COVER FOR WATERTIGHT MANHOLES

DATE:	REVISIONS

STANDARD DETAIL

DATE: 10-03-16

SHEET 1 OF 1

STD. No. S-1.09

CITY OF CLAREMONT, NORTH CAROLINA · 1893 ·

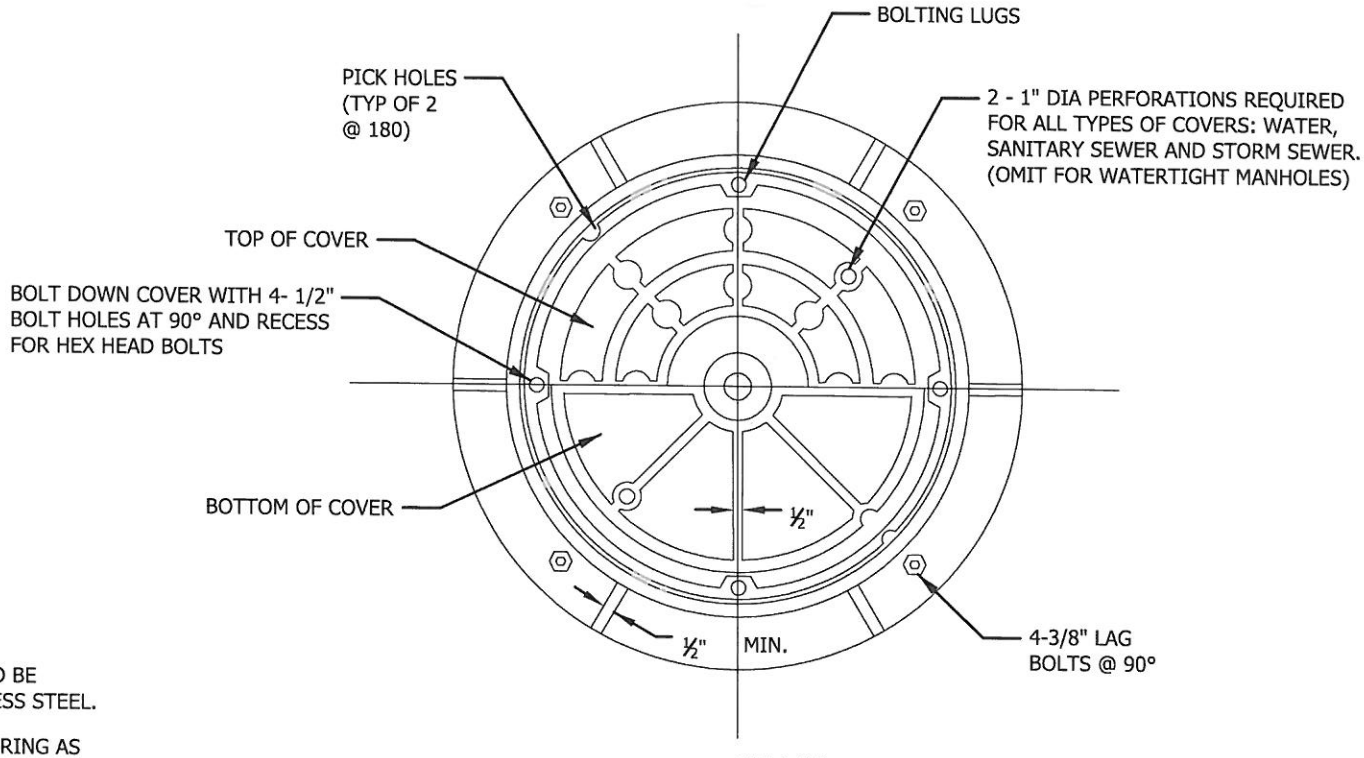

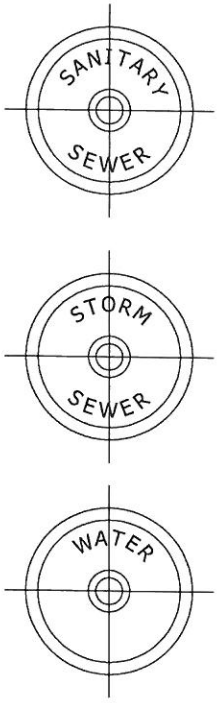

COVER LETTERING DETAIL

NOTES:

1) ALL BOLTS ARE TO BE TYPE 316 STAINLESS STEEL.
2) USE COVER LETTERING AS APPROPRIATE FOR APPLICATION.
3) RING AND COVER WILL HAVE MACHINED SEAT AND WILL CONFORM TO ASTM A48, CLASS 35B

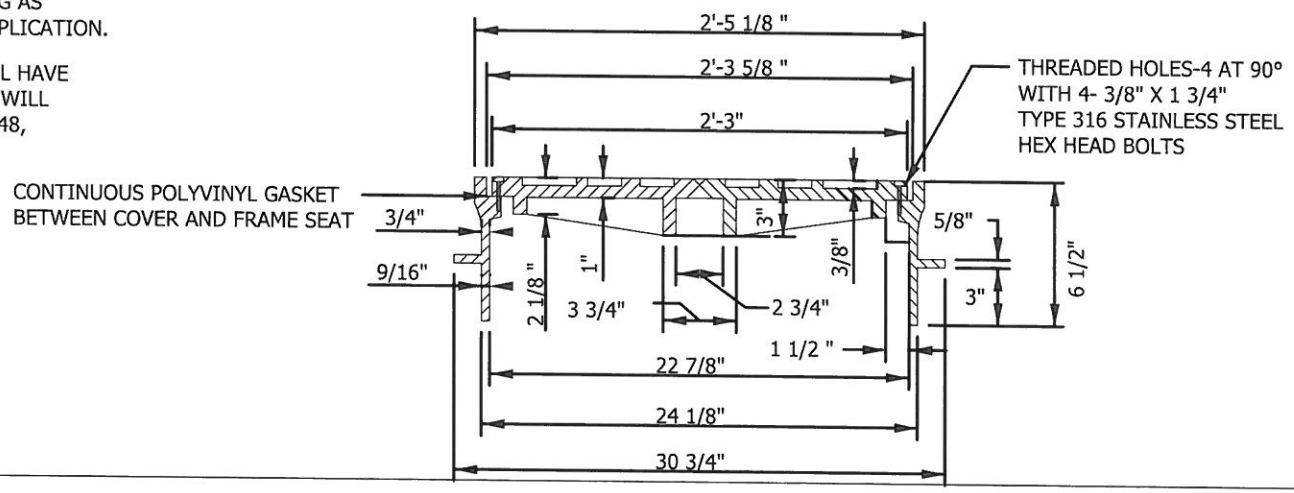

FLAT TOP SEALED RING & COVER

DATE:	REVISIONS

STANDARD DETAIL

DATE: 10-03-16

SHEET 1 OF 1

STD. No. S-1.10

CITY OF CLAREMONT, NORTH CAROLINA · 1893 ·

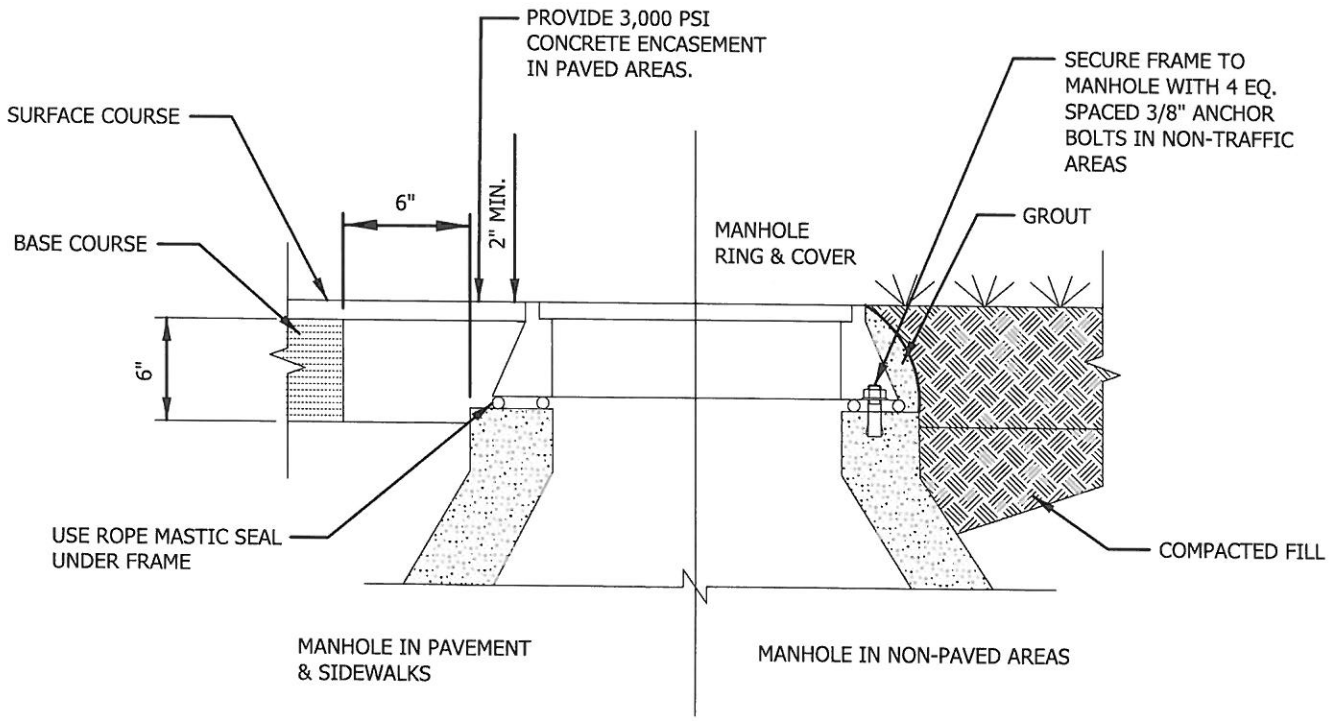

MANHOLE RING AND COVER ANCHORING

DATE:	REVISIONS

STANDARD DETAIL

DATE: 10-03-16

SHEET 1 OF 1

STD. No. S-1.11

CITY OF CLAREMONT, NORTH CAROLINA · 1893 ·

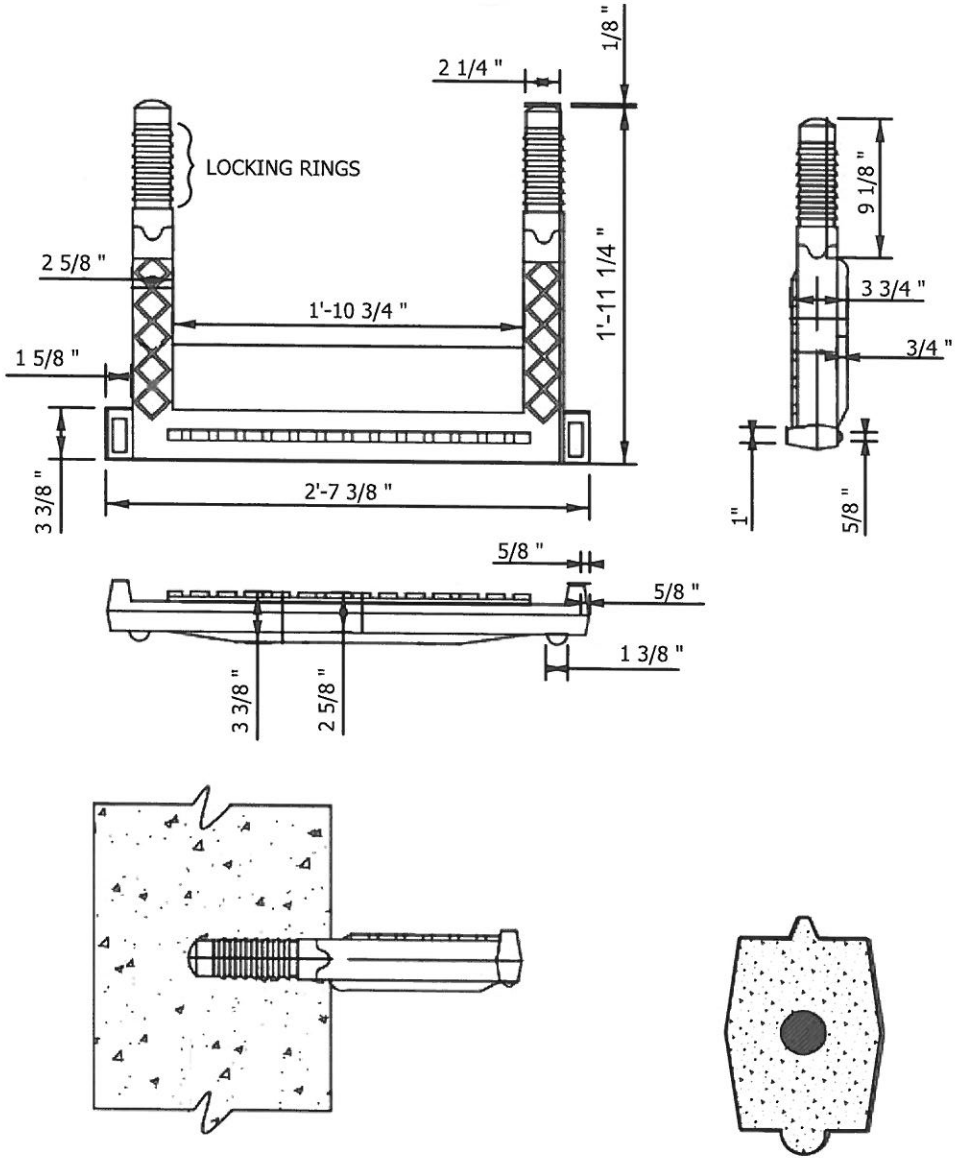

MANHOLE STEPS

DATE:	REVISIONS

STANDARD DETAIL

DATE: 10-03-16

SHEET 1 OF 1

STD. No. S-1.12

CITY OF CLAREMONT, NORTH CAROLINA · 1893 ·

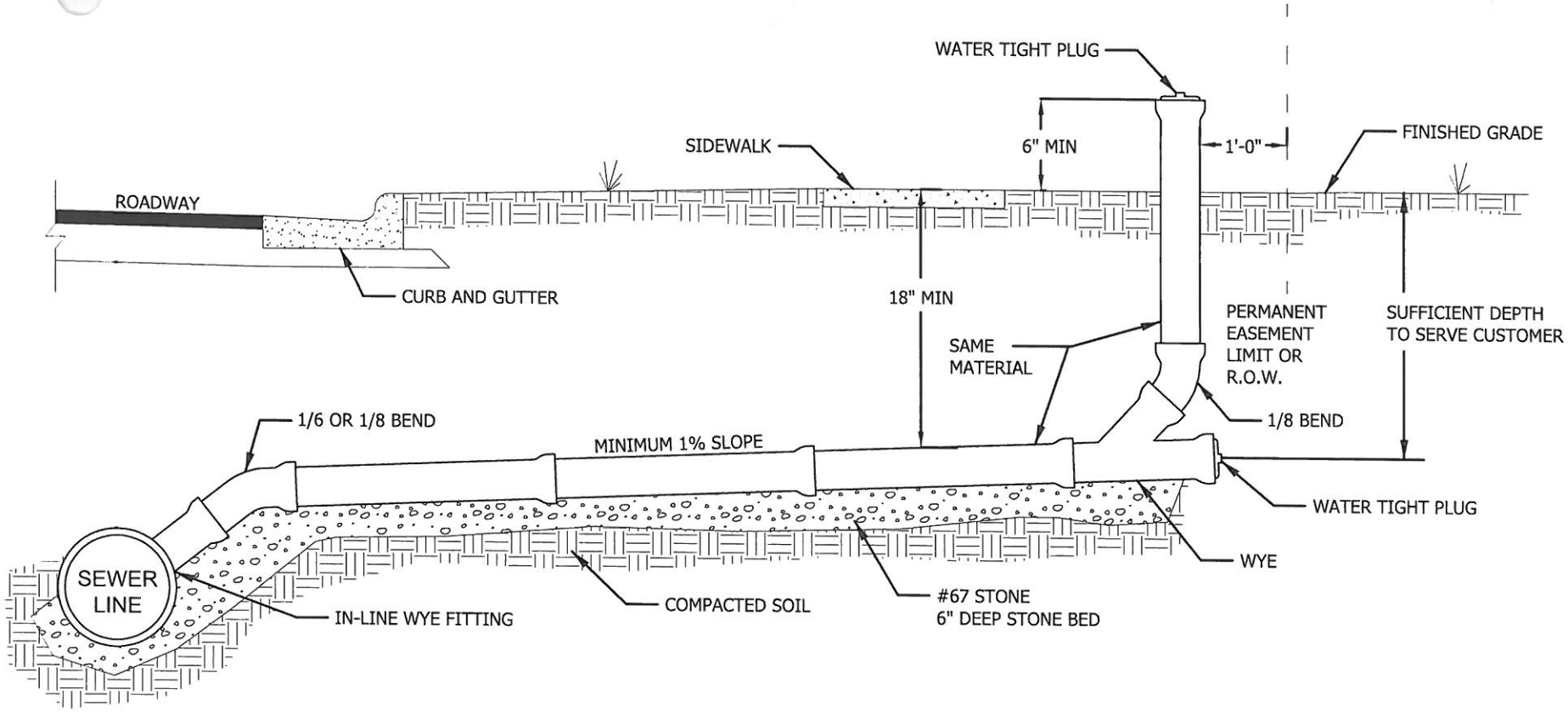

NOTES:

1) USE D.I.P. FOR LATERAL IF DEPTH IS LESS THAN 3 FT. OR GREATER THAN 12 FT.

2) NO TAPPING SADDLES ALLOWED FOR NEW CONSTRUCTION. IF USED ON AN EXISTING LINE, SADDLE SHALL BE ROMAC INDUSTRIES STYLE CB OR EQUAL.

3) NO TAPPING OF CLEAN OUT RISER. CONNECTION MUST BE MADE TO PLUGGED END.

DEPTH < 20 FEET:
- UNDERCUT TRENCH BOTTOM 6 INCHES MINIMUM BELOW PIPE
- FILL PIPE TO SPRING LINE WITH NO. 67 STONE

DEPTH > 20 FEET:
- UNDERCUT TRENCH BOTTOM 6 INCHES MINIMUM BELOW PIPE
- FILL TO 6 INCHES ABOVE PIPE WITH NO. 67 STONE

STANDARD SANITARY SEWER SERVICE

DATE:	REVISIONS

STANDARD DETAIL

DATE: 10-03-16

SHEET 1 OF 1

STD. No. S-1.13

CITY OF CLAREMONT, NORTH CAROLINA · 1893 ·

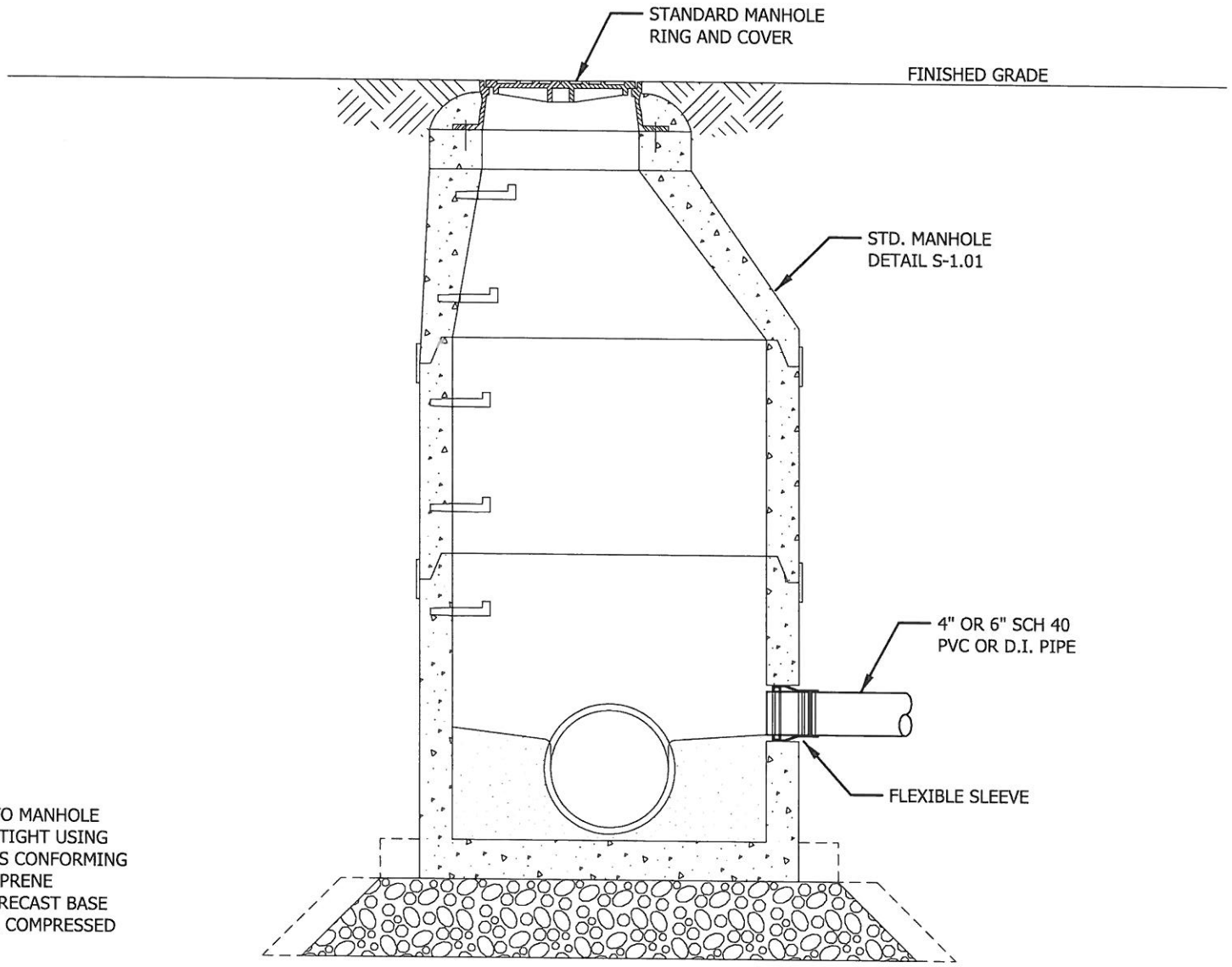

NOTE:

CONNECTION OF PIPE TO MANHOLE SHALL BE MADE WATERTIGHT USING RESILIENT CONNECTORS CONFORMING TO ASTM C 923 OR NEOPRENE BOOTS EMBEDDED IN PRECAST BASE WITH STAINLESS STEEL COMPRESSED BANDS.

SEWER LATERAL CONNECTION TO MANHOLE

DATE:	REVISIONS

STANDARD DETAIL

DATE: 10-03-16

SHEET 1 OF 1

STD. No. S-1.14

CITY OF CLAREMONT, NORTH CAROLINA · 1893 ·

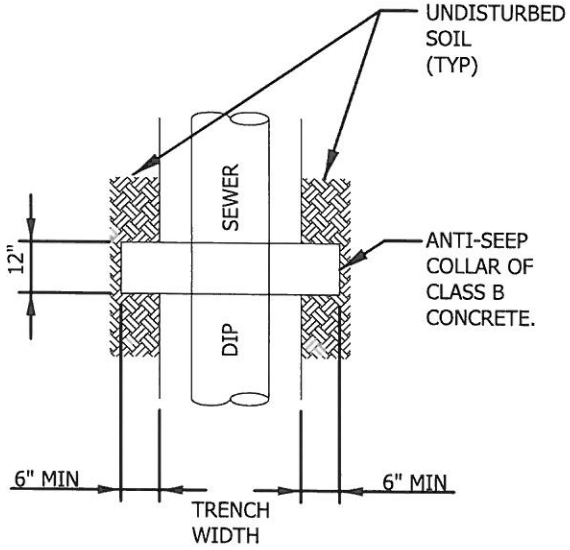

PLAN

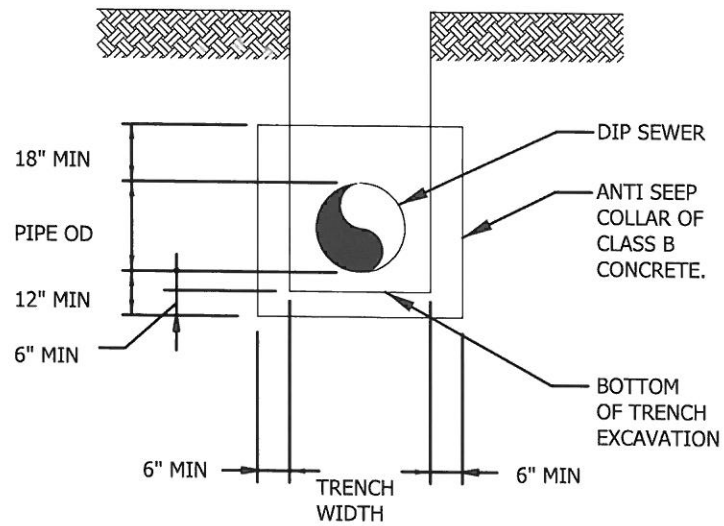

SECTION

ANTI-SEEP COLLAR

DATE:	REVISIONS

STANDARD DETAIL

DATE: 10-03-16

SHEET 1 OF 1

STD. No. S-1.15

CITY OF CLAREMONT, NORTH CAROLINA · 1893 ·

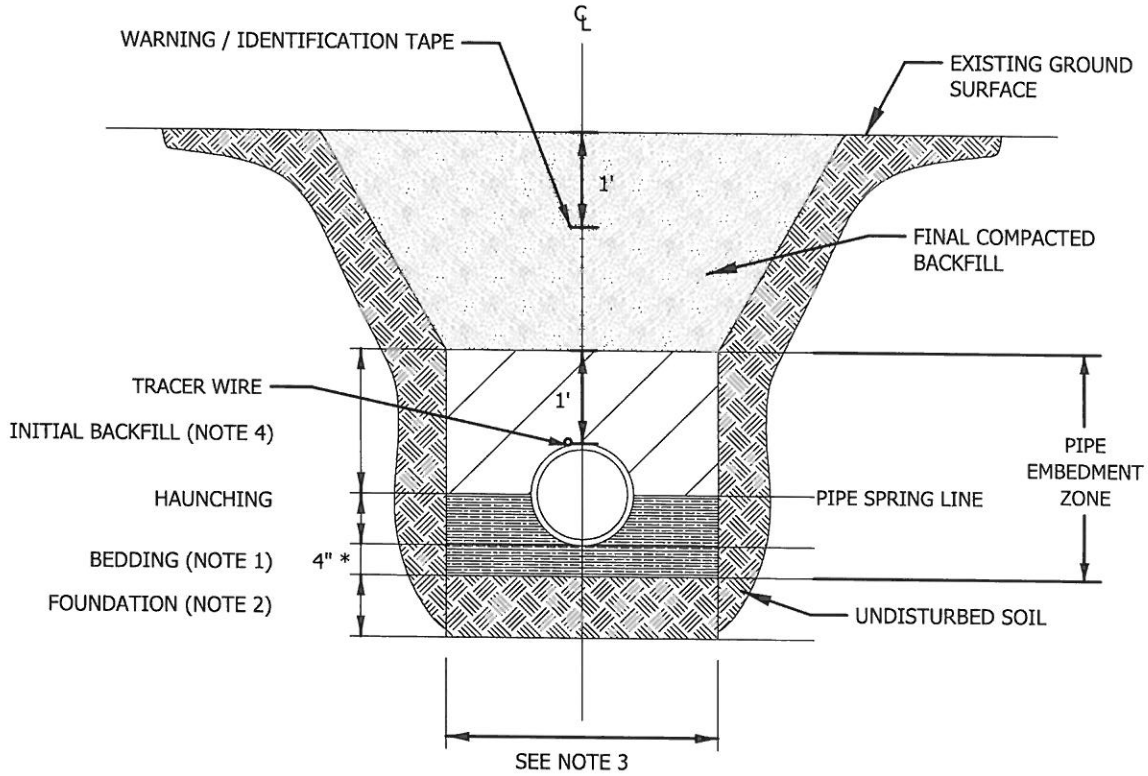

* 6" REQUIRED FOR PIPES GREATER THAN 30" IN DIAMETER

NOTES:

1) STONE BEDDING IS NOT REQUIRED IN SUITABLE CLASS I, CLASS II, CLASS III, AND STABLE CLASS IV SOILS. PROVIDE STONE BEDDING IN UNSTABLE CLASS IV OR CLASS V SOILS, RUNNING WATER OR OTHER UNSTABLE SOIL CONDITIONS IN BEDDING AND HAUNCH ZONE. BACKFLL WITH CLASS I, II, OR III MATERIAL IN INITIAL BACKFILL.

2) CLASS I FOUNDATION STONE SHALL BE REQUIRED WHEN SOIL CONDITIONS ARE UNSTABLE. UNDERCUT DEPTH AS DIRECTED BY CITY.

3) TRENCH WIDTH IS MINIMUM OF THE PIPE O.D. PLUS 18" AND MAXIMUM OF PIPE O.D. PLUS 24".

4) INITIAL BACKFILL SHALL BE PLACED AND COMPACTED IN 6" LIFTS. INITIAL BACKFILL SHALL CONTAIN NO MATERIAL OVER 1 1/2" IN DIAMETER, FROZEN LUMPS, OR DEBRIS.

5) BACKFILL SHALL BE COMPACTED IN ACCORDANCE WITH SPECIFICATIONS.

DUCTILE IRON (RIGID) PIPE GRAVITY SEWER BEDDING

DATE:	REVISIONS

STANDARD DETAIL

DATE: 10-03-16

SHEET 1 OF 1

STD. No. S-1.16

CITY OF CLAREMONT, NORTH CAROLINA · 1893 ·

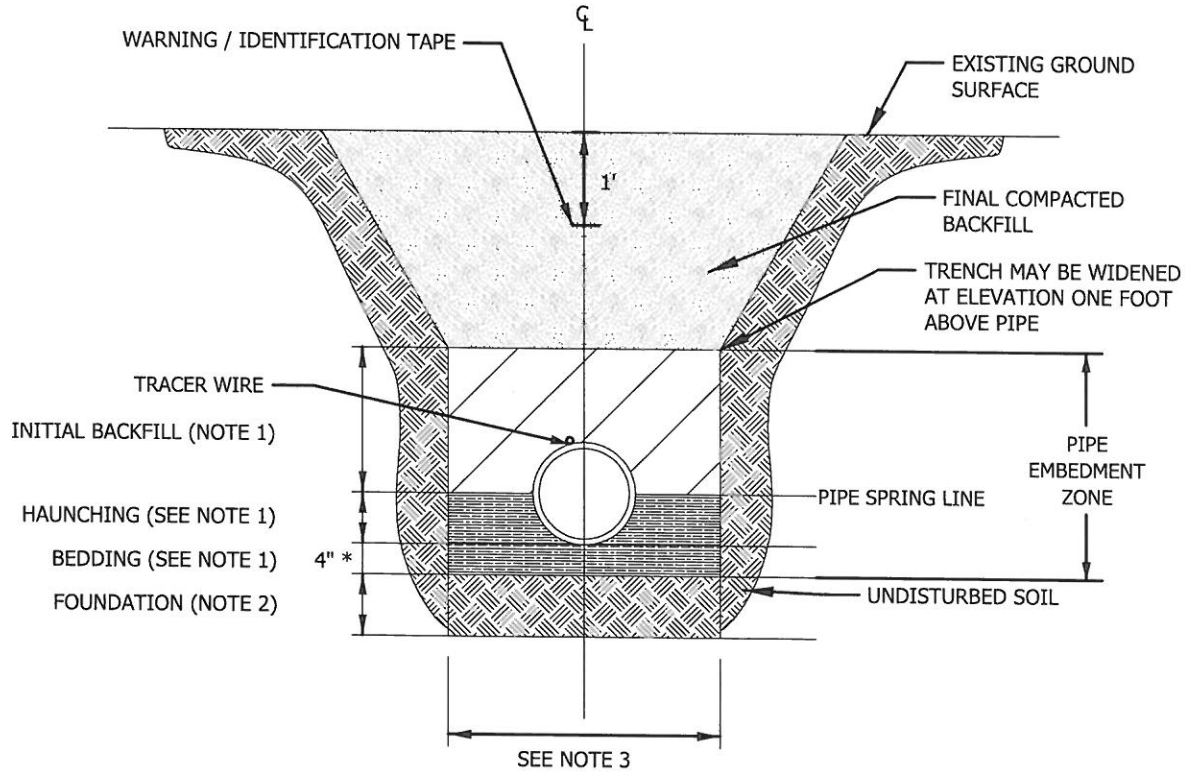

* 6" REQUIRED FOR PIPES GREATER THAN 30" IN DIAMETER

NOTES:

1) FOR DEPTHS UP TO 14 FEET PROVIDE CLASS I MATERIAL FOR BEDDING AND HAUNCHING. BACKFILL WITH CLASS I, II, OR III MATERIAL IN INITIAL BACKFILL. FOR DEPTHS GREATER THAN 14 FEET, PROVIDE CLASS I MATERIAL FOR BEDDING HAUNCHING AND INITIAL BACKFILL.

2) CLASS I FOUNDATION STONE SHALL BE REQUIRED WHEN SOIL CONDITIONS ARE UNSTABLE. UNDERCUT DEPTH AS DIRECTED BY CITY.

3) TRENCH WIDTH IS MINIMUM OF THE PIPE O.D. PLUS 18" AND MAXIMUM OF PIPE O.D. PLUS 24".

4) INITIAL BACKFILL SHALL BE PLACED AND COMPACTED IN 6" LIFTS. INITIAL BACKFILL SHALL CONTAIN NO MATERIAL OVER 1 1/2" IN DIAMETER, FROZEN LUMPS, OR DEBRIS.

5) BACKFILL SHALL BE COMPACTED IN ACCORDANCE WITH SPECIFICATIONS.

PVC (FLEXIBLE) GRAVITY SEWER PIPE BEDDING

DATE:	REVISIONS

STANDARD DETAIL

DATE: 10-03-16

SHEET 1 OF 1

STD. No. S-1.17

CITY OF CLAREMONT, NORTH CAROLINA · 1893 ·

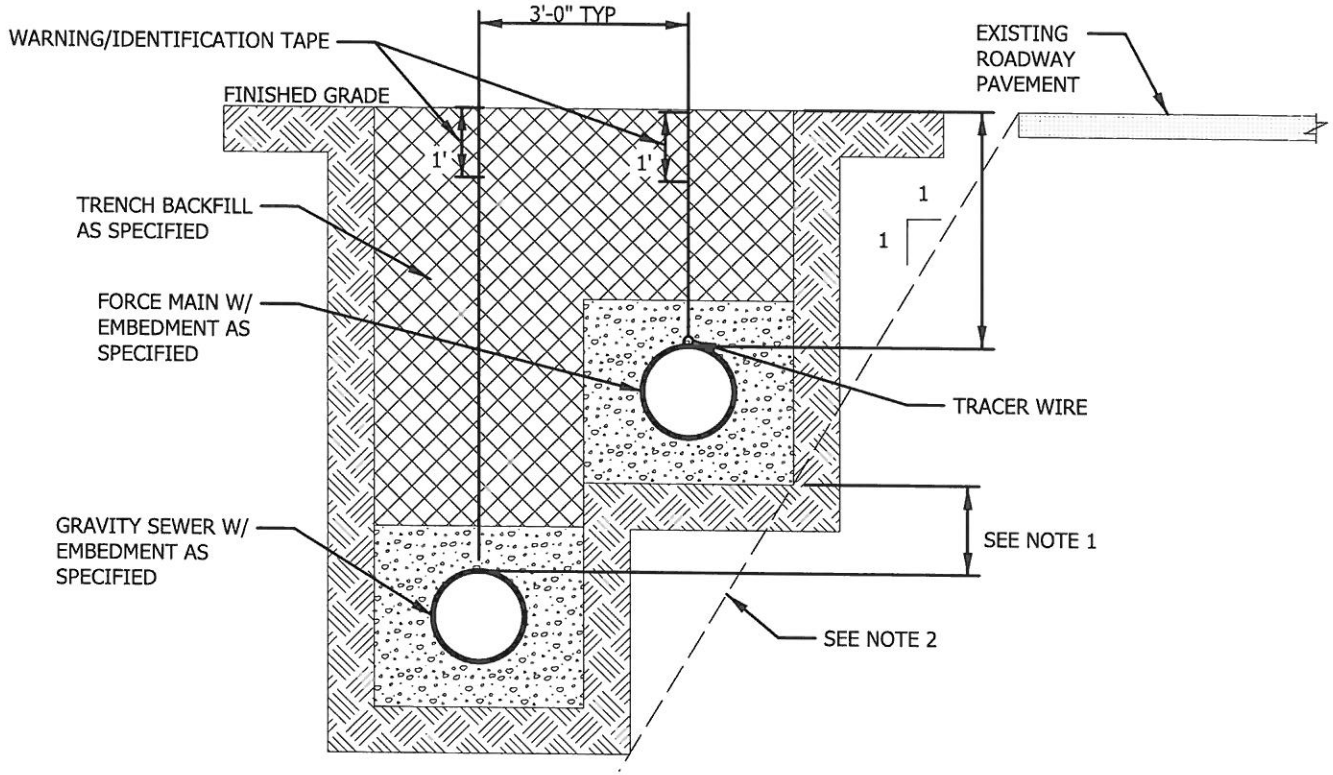

NOTES:

1) PROVIDE SUFFICIENT VERTICAL CLEARANCE BETWEEN GRAVITY SEWER AND FORCE MAIN SO AS TO ALLOW FUTURE MAIN AND SERVICE CONNECTIONS TO GRAVITY SEWER.

2) ALL TRENCHING ADJACENT TO ROADWAY SHALL BE OUTSIDE THE THEORITICAL 1:1 SLOPE FROM THE EXISTING EDGE OF PAVEMENT.

TYPICAL TRENCH GRAVITY SEWER AND FORCE MAIN

DATE:	REVISIONS

STANDARD DETAIL

DATE: 10-03-16

SHEET 1 OF 1

STD. No. S-1.18

CITY OF CLAREMONT, NORTH CAROLINA · 1893 ·

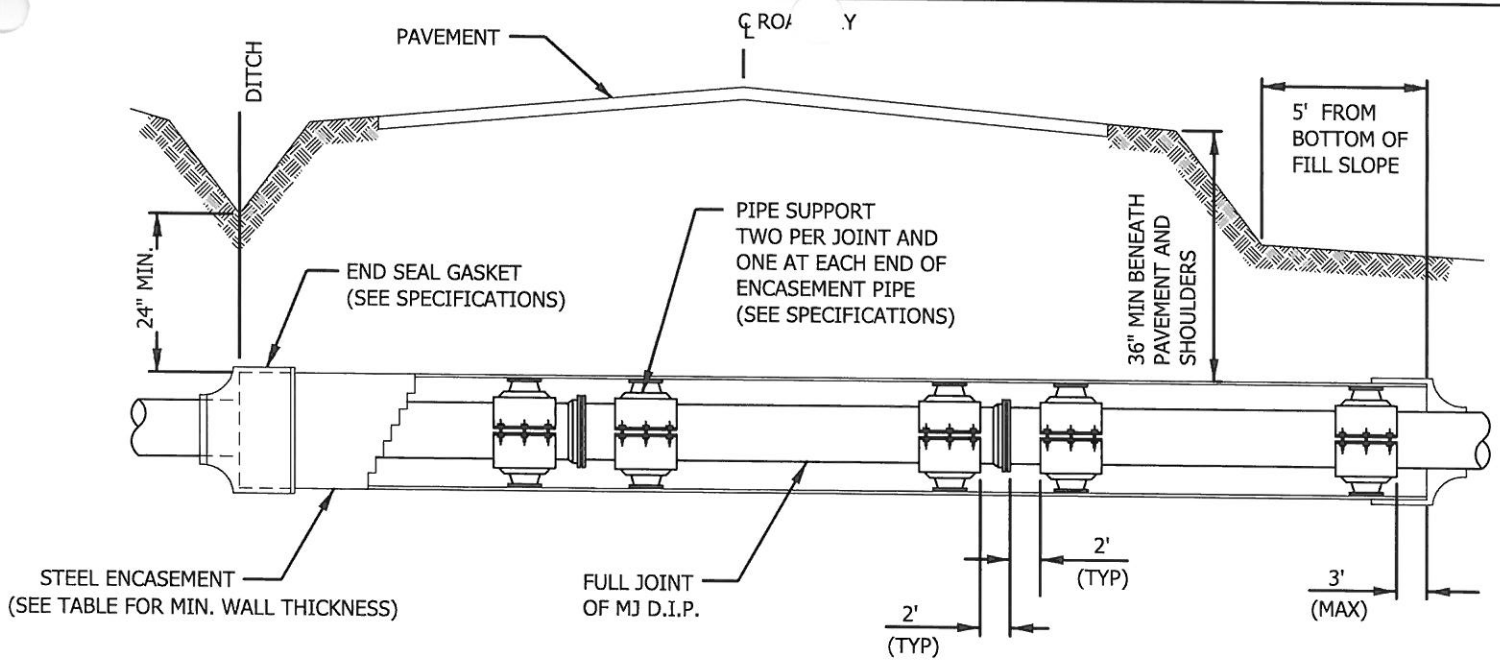

ENCASEMENT PIPE WALL THICKNESS			
ROADWAY		RAILROAD	
PIPE SIZE (O.D. INCHES)	WALL THICKNESS	PIPE SIZE (O.D. INCHES)	WALL THICKNESS
4 - 12 3/4	0.188	12 3/4 & UNDER	0.188
16 - 24	0.250	16	0.281
30	0.312	24	0.375
36	0.375	30	0.469
42	0.500	36	0.531
48	0.500	42	0.625
		48	0.688

NOTES:

1) FOR ROADS WITH ADT <2000, ENCASEMENT TO EXTEND 3' BEHIND CURB SECTIONS.

2) ENCASEMENT TO EXTEND FROM DITCH LINE TO DITCH LINE IN CUT SECTIONS.

PIPE INSTALLATION IN STEEL ENCASEMENT

DATE:	REVISIONS

STANDARD DETAIL

DATE: 10-03-16

SHEET 1 OF 1

STD. No. S-1.19

CITY OF CLAREMONT, NORTH CAROLINA · 1893 ·

1 PIPE DIAMETER (INCH)	2 MINIMUM TIME (MIN:SEC)	3 LENGTH FOR MINIMUM TIME (FEET)	4 TIME FOR LONGER LENGTH (SEC)	5 SPECIFICATION TIME FOR LENGTH (L) SHOWN (MIN:SEC)							
				100FT	150FT	200FT	250FT	300FT	350FT	400FT	450FT
4	3:46	597	.380 L	3:46	3:46	3:46	3:46	3:46	3:46	3:46	3:46
6	5:40	398	.854 L	5:40	5:40	5:40	5:40	5:40	5:40	5:42	6:24
8	7:34	298	1.520 L	7:34	7:34	7:34	7:36	7:36	8:52	10:08	11:24
10	9:26	239	2.374 L	9:26	9:26	9:26	9:53	11:52	13:51	15:49	17:48
12	11:20	199	3.418 L	11:20	11:20	11:24	14:15	17:05	19:56	22:47	25:38
15	14:10	159	5.324 L	14:10	14:10	17:48	22:15	26:42	31:09	31:36	40:04
18	17:00	133	7.692 L	17:00	19:13	25:38	32:03	38:27	44:52	51:16	57:41
21	19:50	114	10.470 L	19:50	26:10	34:54	43:37	52:21	61:00	69:48	78:31
24	22:40	99	13.674 L	22:47	34:11	45:34	56:58	68:22	79:46	91:10	102:33
27	25:30	88	17.306 L	28:51	43:16	57:41	72:07	86:32	100:57	115:22	129:48
30	28:20	80	21.366 L	35:37	53:25	71:13	89:02	106:50	124:38	142:26	160:15
33	31:10	72	25.852 L	43:05	64:38	86:10	107:43	129:16	150:43	172:21	193:53
36	34:00	66	30.768 L	51:17	76:55	102:34	128:12	153:50	179:29	205:07	230:46

LOW PRESSURE AIR TESTING FOR GRAVITY SEWER MAINS

DATE:	REVISIONS

STANDARD DETAIL

DATE: 10-03-16

SHEET 1 OF 1

STD. No. S-1.20

CITY OF CLAREMONT, NORTH CAROLINA · 1893 ·

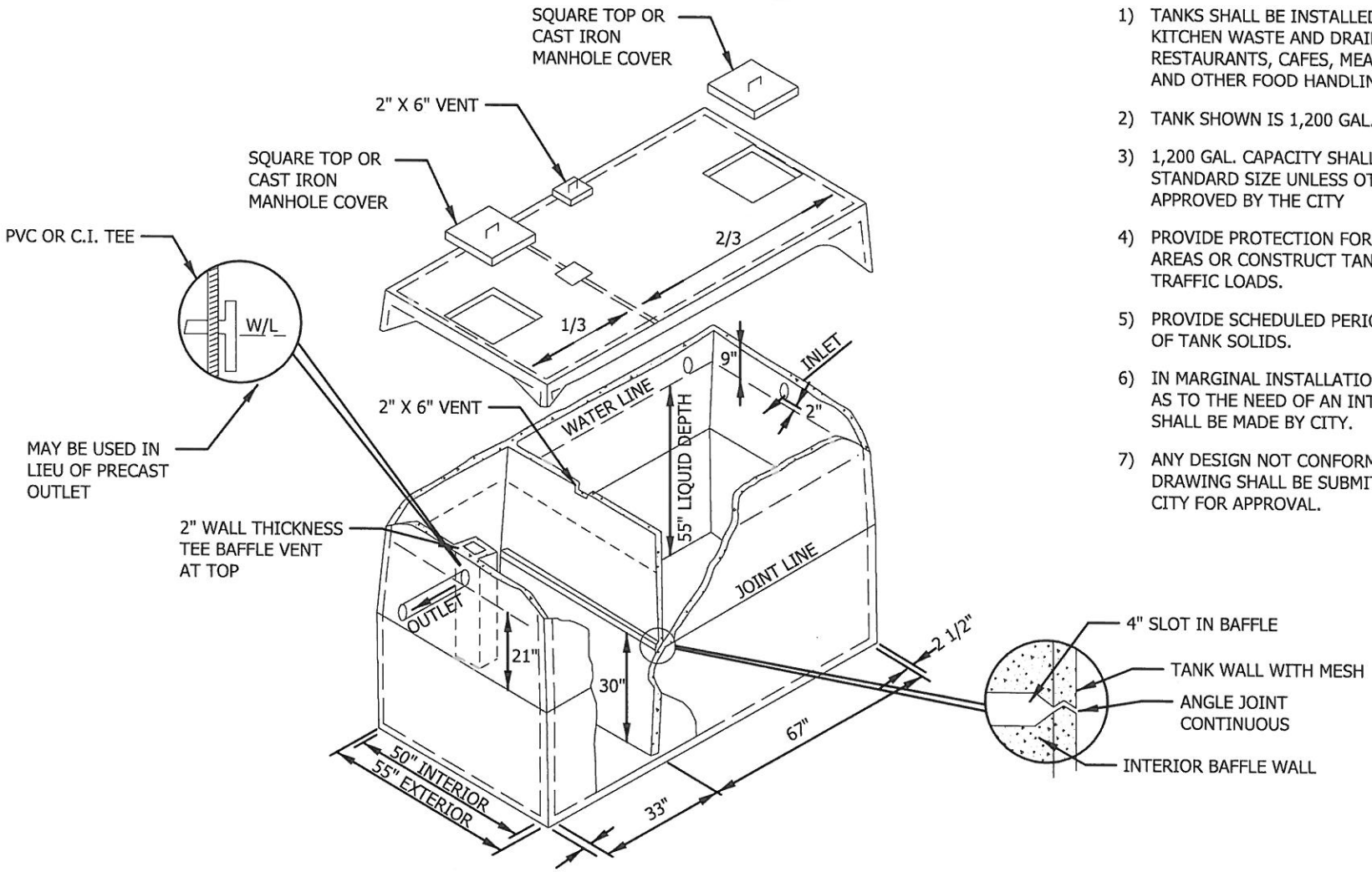

NOTES:

1) TANKS SHALL BE INSTALLED ON ALL KITCHEN WASTE AND DRAIN LINES FROM RESTAURANTS, CAFES, MEAT MARKETS, AND OTHER FOOD HANDLING ESTABLISHMENTS.
2) TANK SHOWN IS 1,200 GAL. CAPACITY.
3) 1,200 GAL. CAPACITY SHALL BE THE STANDARD SIZE UNLESS OTHERWISE APPROVED BY THE CITY
4) PROVIDE PROTECTION FOR TANK IN TRAFFIC AREAS OR CONSTRUCT TANK TO WITHSTAND TRAFFIC LOADS.
5) PROVIDE SCHEDULED PERIODIC CLEANING OF TANK SOLIDS.
6) IN MARGINAL INSTALLATIONS, THE DECISION AS TO THE NEED OF AN INTERCEPTOR SHALL BE MADE BY CITY.
7) ANY DESIGN NOT CONFORMING TO THIS DRAWING SHALL BE SUBMITTED TO CITY FOR APPROVAL.

TYPICAL TWO COMPARTMENT GREASE INTERCEPTOR TANK

DATE:	REVISIONS

STANDARD DETAIL

DATE: 10-03-16

SHEET 1 OF 1

STD. No. S-1.21

CITY OF CLAREMONT, NORTH CAROLINA · 1893 ·

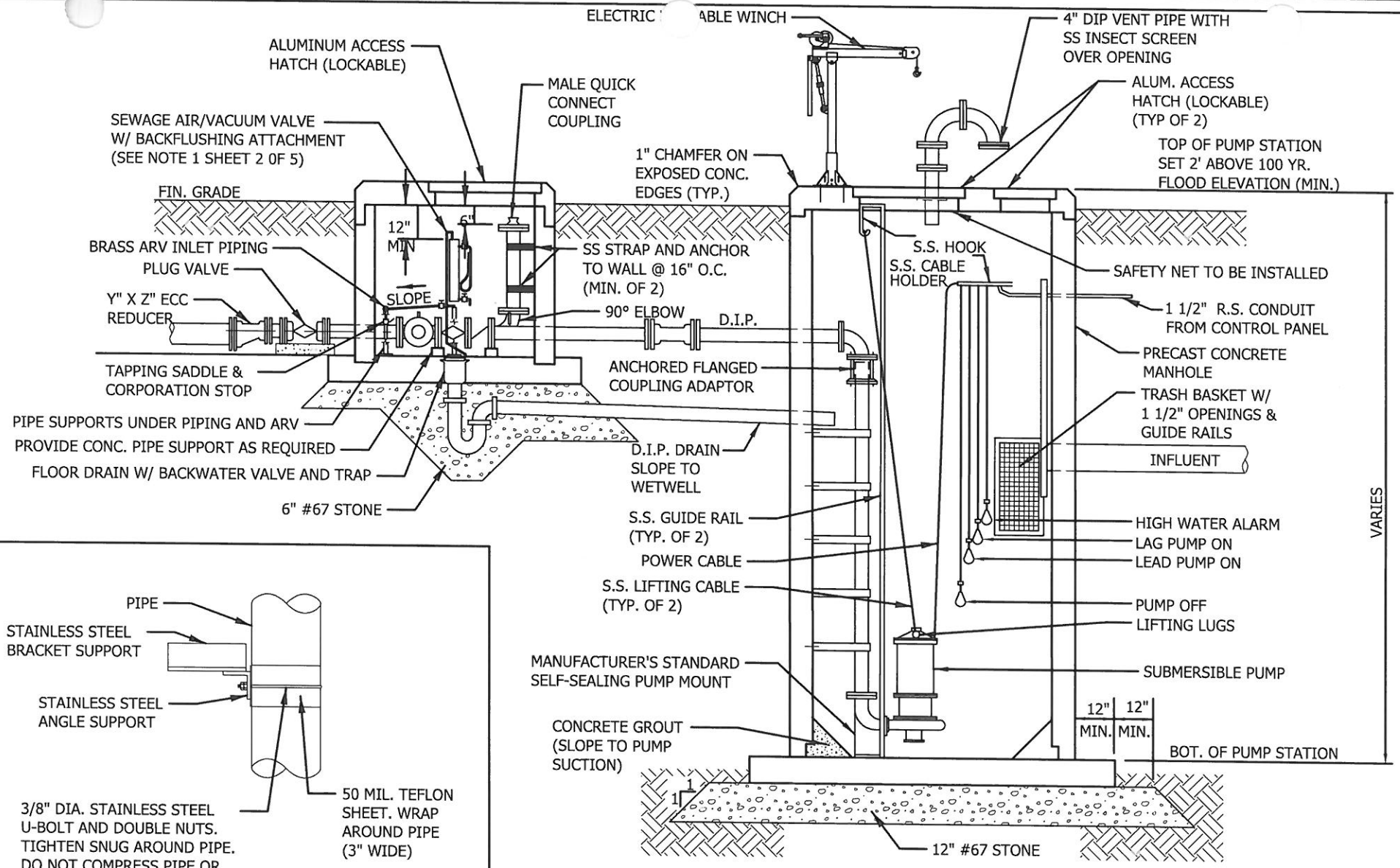

TYPICAL PUMP STATION LAYOUT

DATE:	REVISIONS

STANDARD DETAIL

DATE: 10-03-16

SHEET 1 OF 5

STD. No. S-1.22

CITY OF CLAREMONT, NORTH CAROLINA · 1893 ·

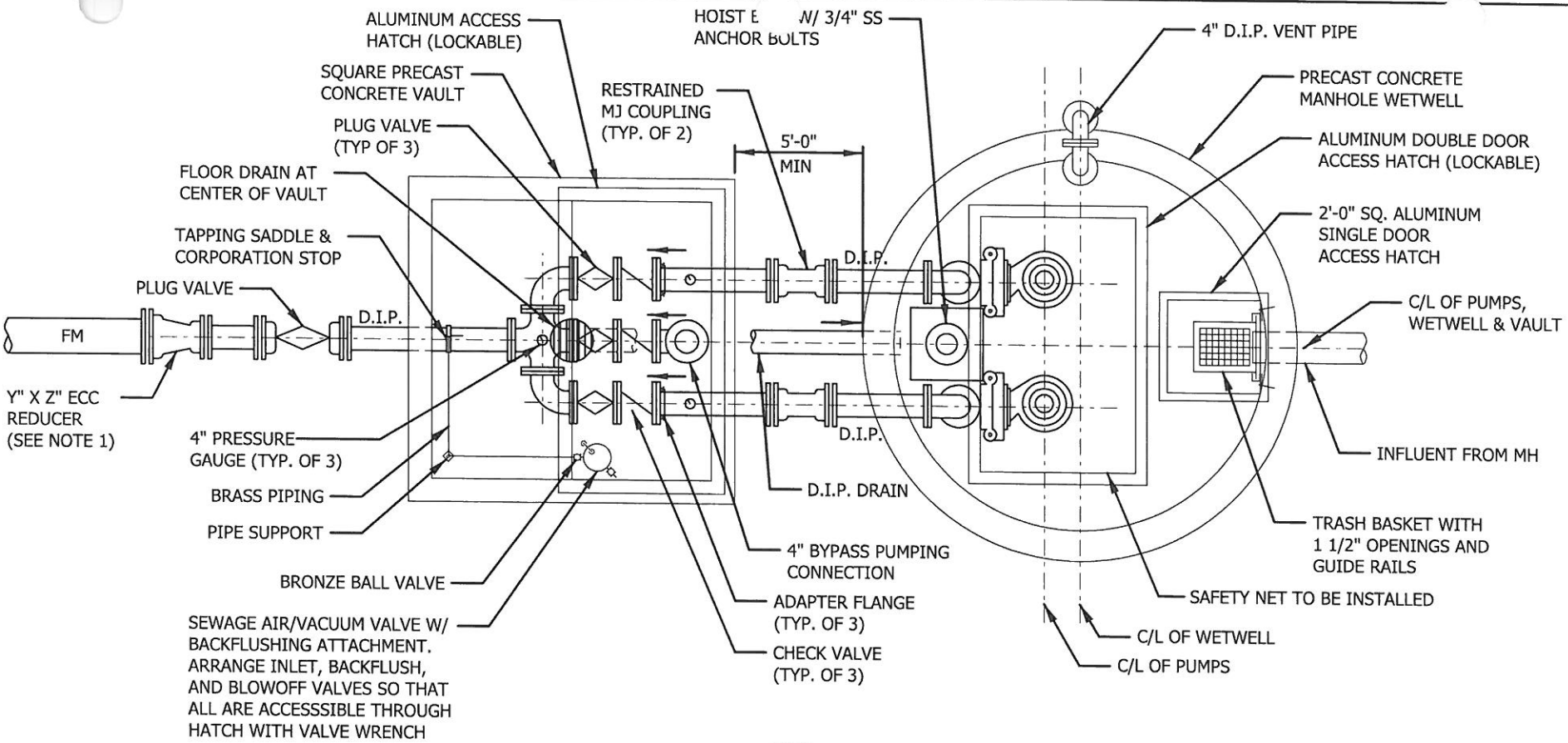

PLAN

NOTES:

1) VALVE VAULT EFFLUENT PIPING IS SHOWN FOR A FORCE MAIN ON A DOWNWARD SLOPE AWAY FROM PUMP STATION. FOR A FORCE MAIN ON AN UPWARD SLOPE AWAY FROM PUMP STATION, THE DESIGNER MAY CONSIDER ROTATING THE ECCENTRIC REDUCER (IF USED) AND DELETING THE ARV.

2) USE D.I.P. THROUGHOUT THE PUMP STATION.

3) ACCESS HATCHES TO BE SIZED TO FACILITATE THE EASY REMOVAL OF PUMPS, VALVES, ETC.

4) LAYOUT SHOWN IS TYPICAL FOR THE CITY OF CLAREMONT. FINAL DESIGN AND LAYOUT OF ALL PUMP STATIONS MUST BE APPROVED BY THE CITY.

TYPICAL PUMP STATION

DATE:	REVISIONS

STANDARD DETAIL

DATE: 10-03-16

SHEET 2 OF 5

STD. No. S-1.22

CITY OF CLAREMONT, NORTH CAROLINA · 1893 ·

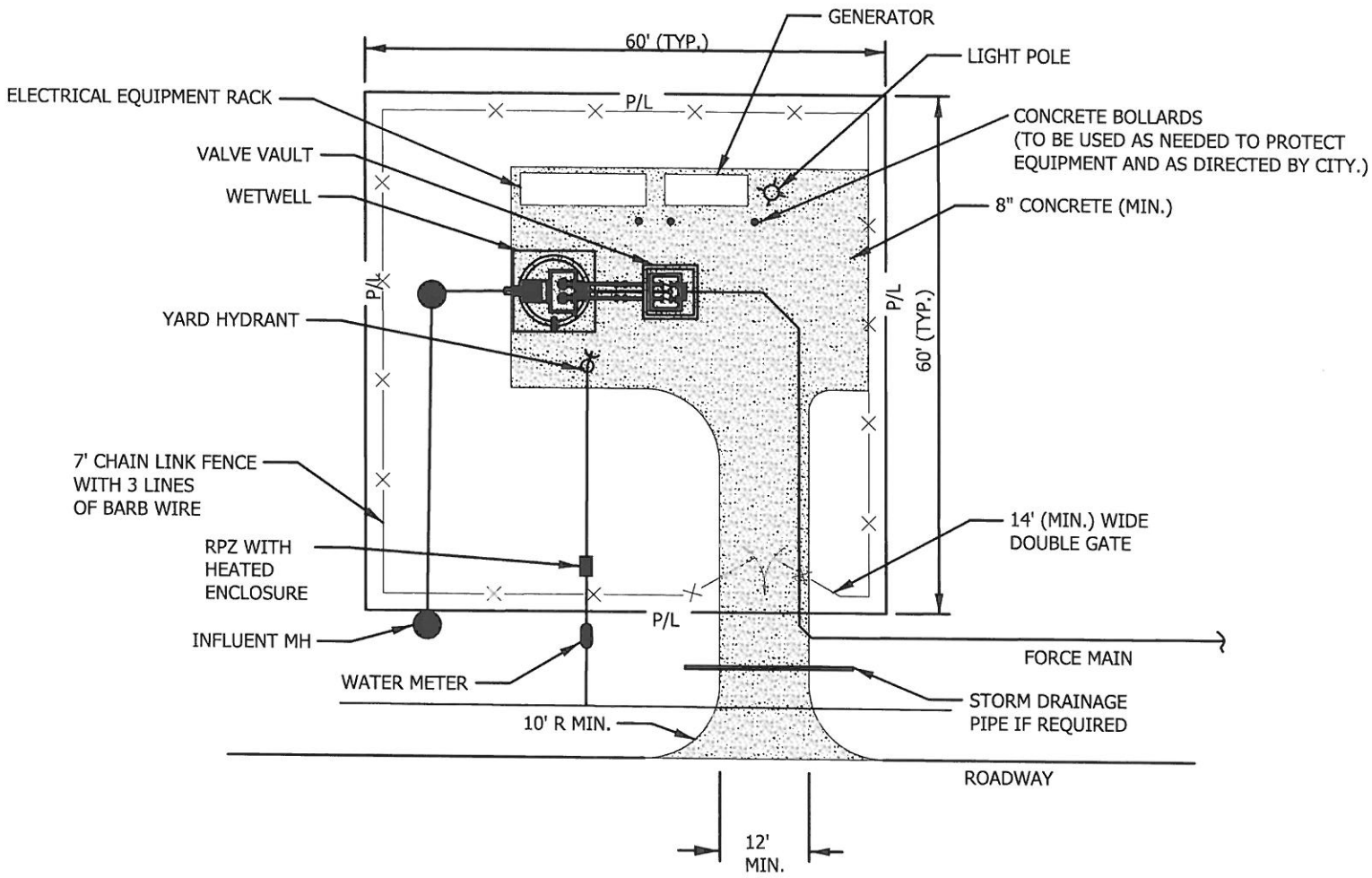

NOTES:

1) ORIENTATION OF COMPONENTS MAY BE ADJUSTED TO SUIT SITE CONDITIONS.

2) MAINTAIN REQUIRED SEPARATION BETWEEN SEWER AND WATER LINES.

SITE

TYPICAL PUMP STATION LAYOUT

DATE:	REVISIONS

STANDARD DETAIL

DATE: 10-03-16

SHEET 3 OF 5

STD. No. S-1.22

CITY OF CLAREMONT, NORTH CAROLINA · 1893 ·

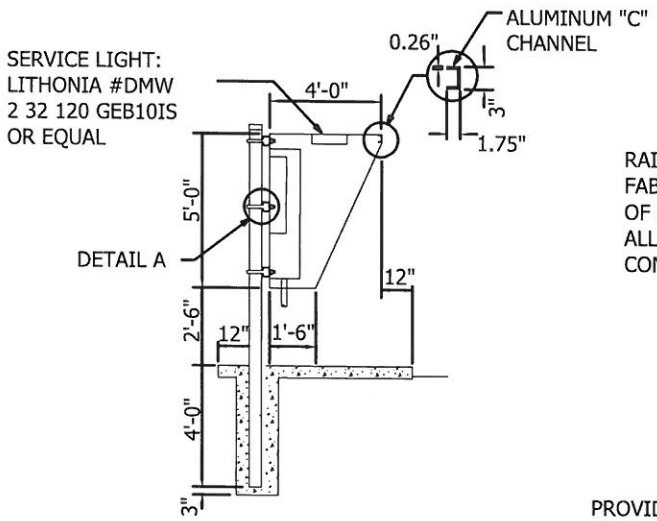

SIDE VIEW

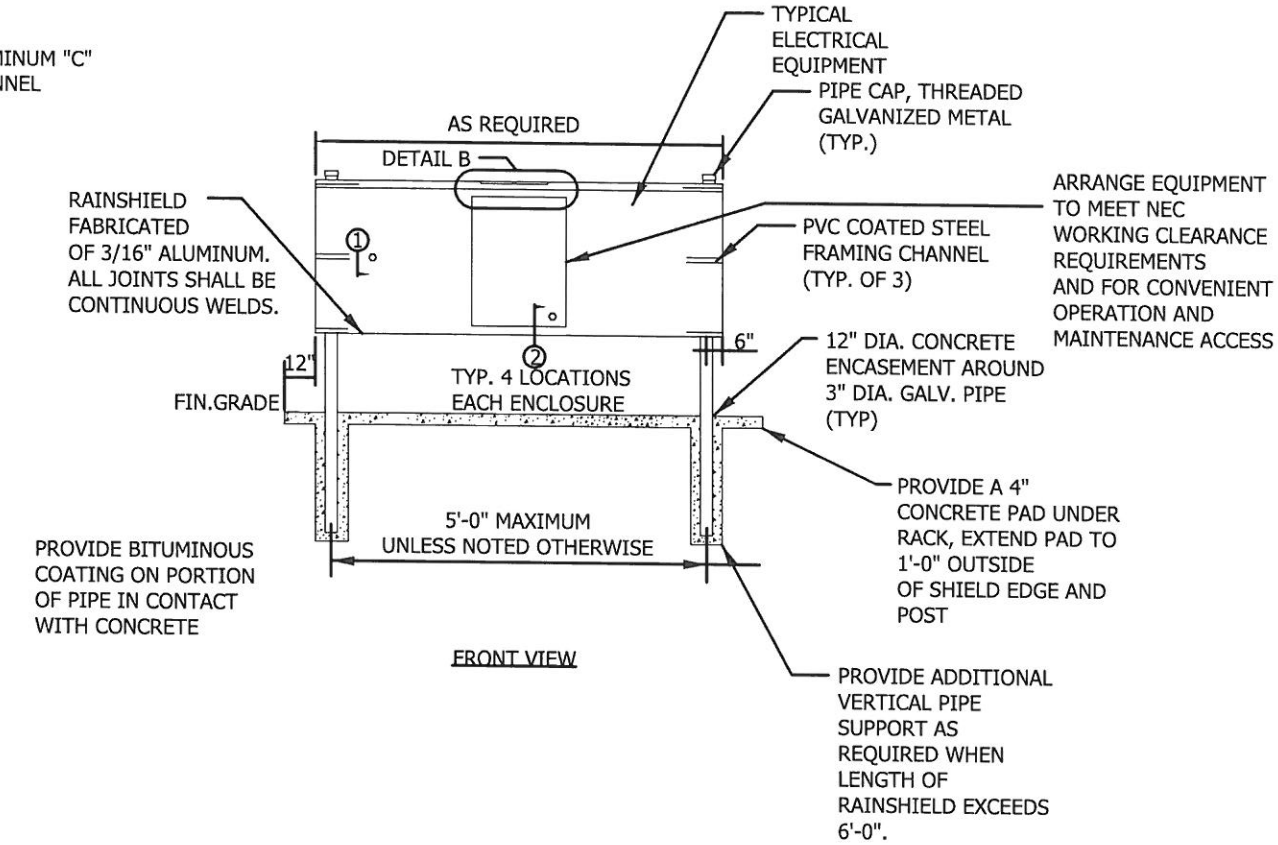

FRONT VIEW

TYPICAL PUMP STATION EQUIPMENT MOUNTING RACK

DATE:	REVISIONS

STANDARD DETAIL

DATE: 10-03-16

SHEET 4 OF 5

STD. No. S-1.22

CITY OF CLAREMONT, NORTH CAROLINA · 1893 ·

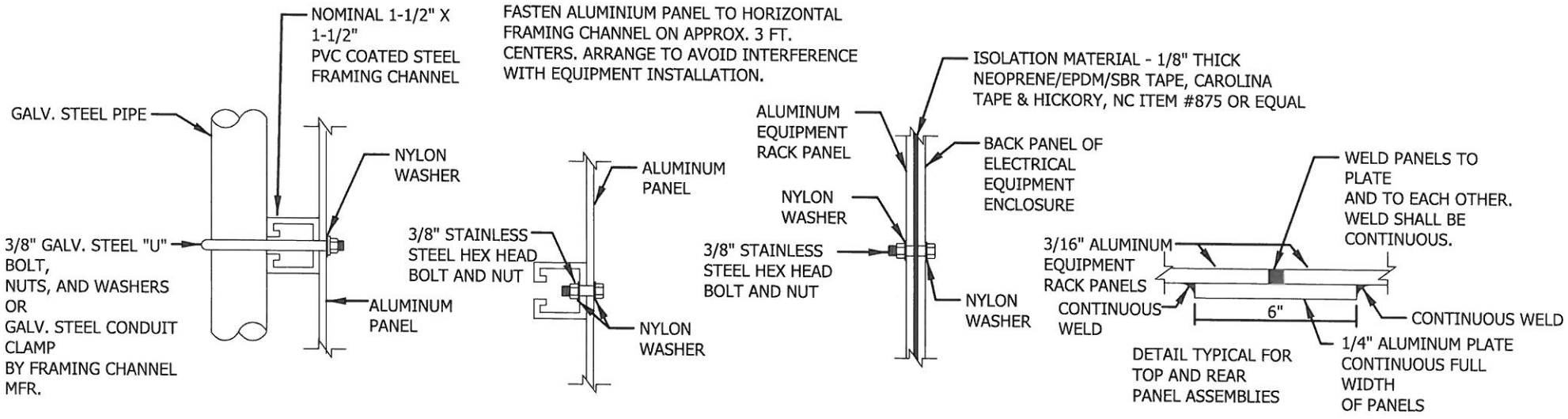

PROVIDE SPLICE IF LENGTH OF EQUIPMENT RACK EXCEEDS STANDARD PANEL LENGTH.

TYPICAL PUMP STATION EQUIPMENT MOUNTING RACK

DATE:	REVISIONS

STANDARD DETAIL

DATE: 10-03-16

SHEET 5 OF 5

STD. No. S-1.22

CITY OF CLAREMONT, NORTH CAROLINA · 1893 ·